Barudan

HIGH SPEED AUTOMATIC EMBROIDERY MACHINE

BENS-YN/YS

PARTS LIST

Machine layout (BENS-YN)

'99.01.05

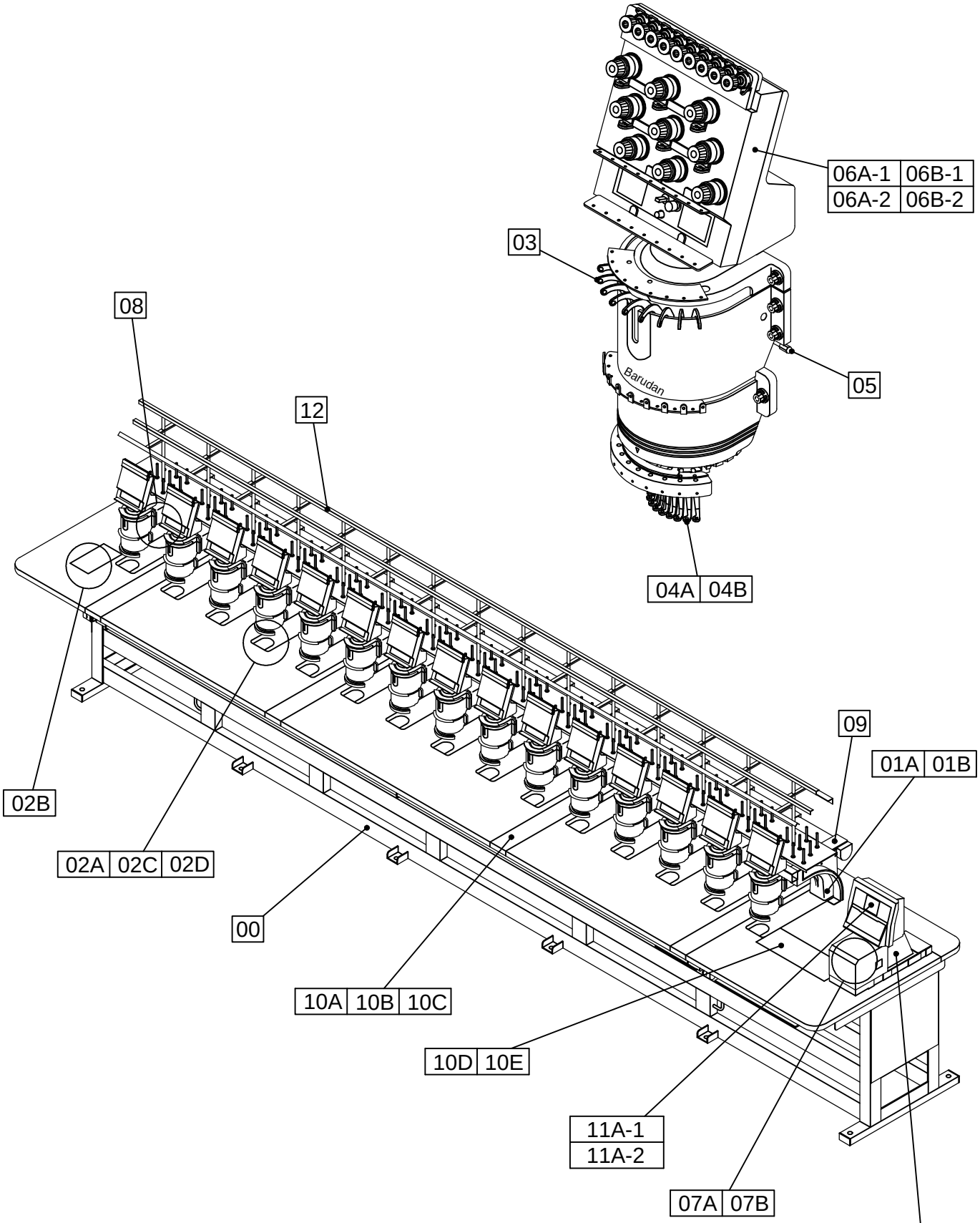

BENS-YN/YS
BENR-YN/YS

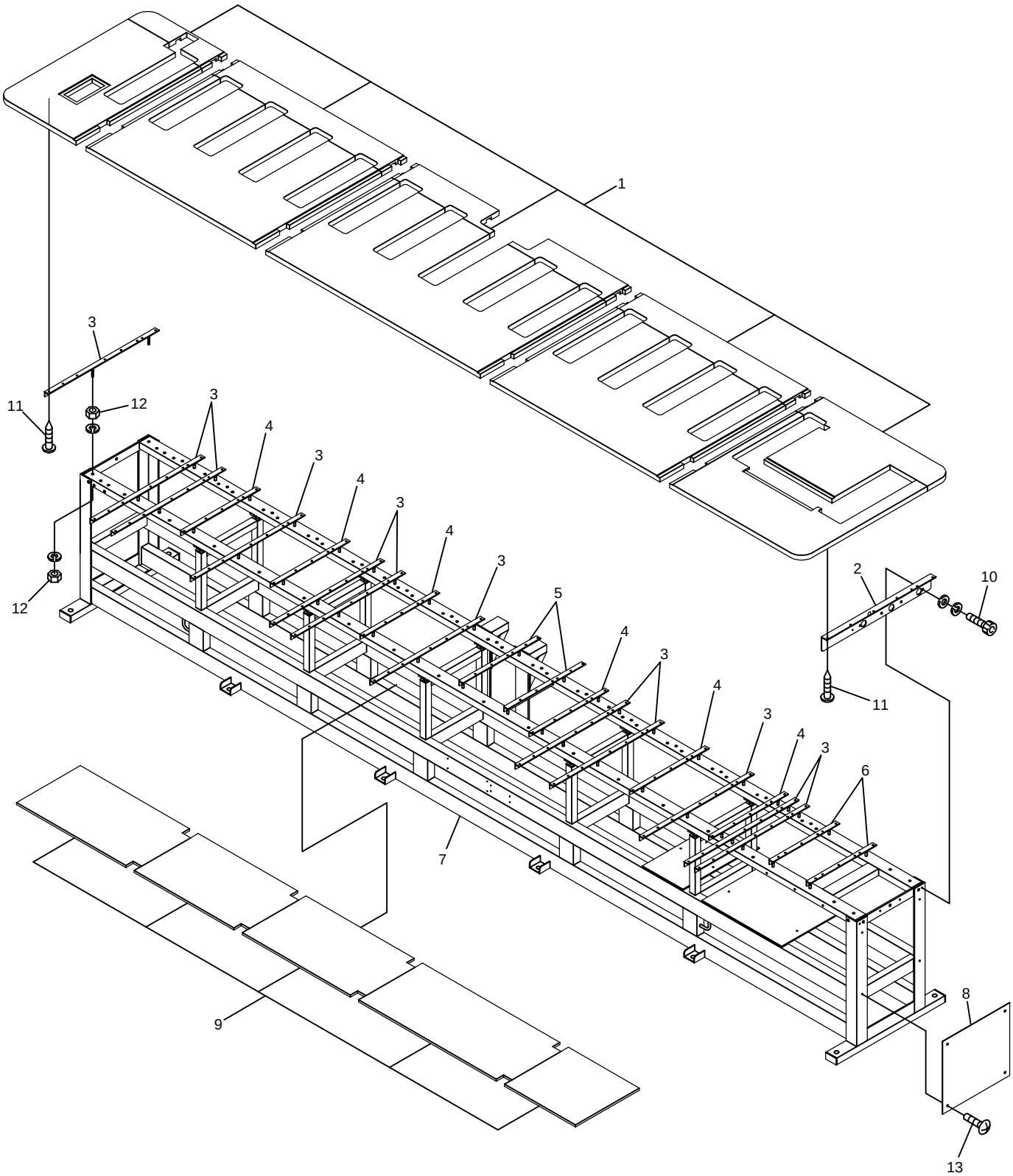

BENS-YN/YS
BENR-YN/YS

00 Table - Frame

ITEM	LIST NO.	DESCRIPTION	Q'TY	NOTE
1	1BKV153203500	Table	1	
2	KV140010	Table support(BENY)	1	
3	KC120680	Table support(790L)	12	
4	KN140950	Table support(540L)	6	
5	KC120830	Table support(740L)	2	
6	KC120841	Table support(475L)	2	
7	1AKV153203500	Frame	1	
8	KC110910	Leg frame side cover R	1	
9	1KN153203500	Shelf board	1	
10		Hex.socket bolt M6×20		
11		Pierce screw 5×23		
12		Hex.nut 3/8		
13		Truss screw M6×8		

01A Head - Bed A

'99.01.19

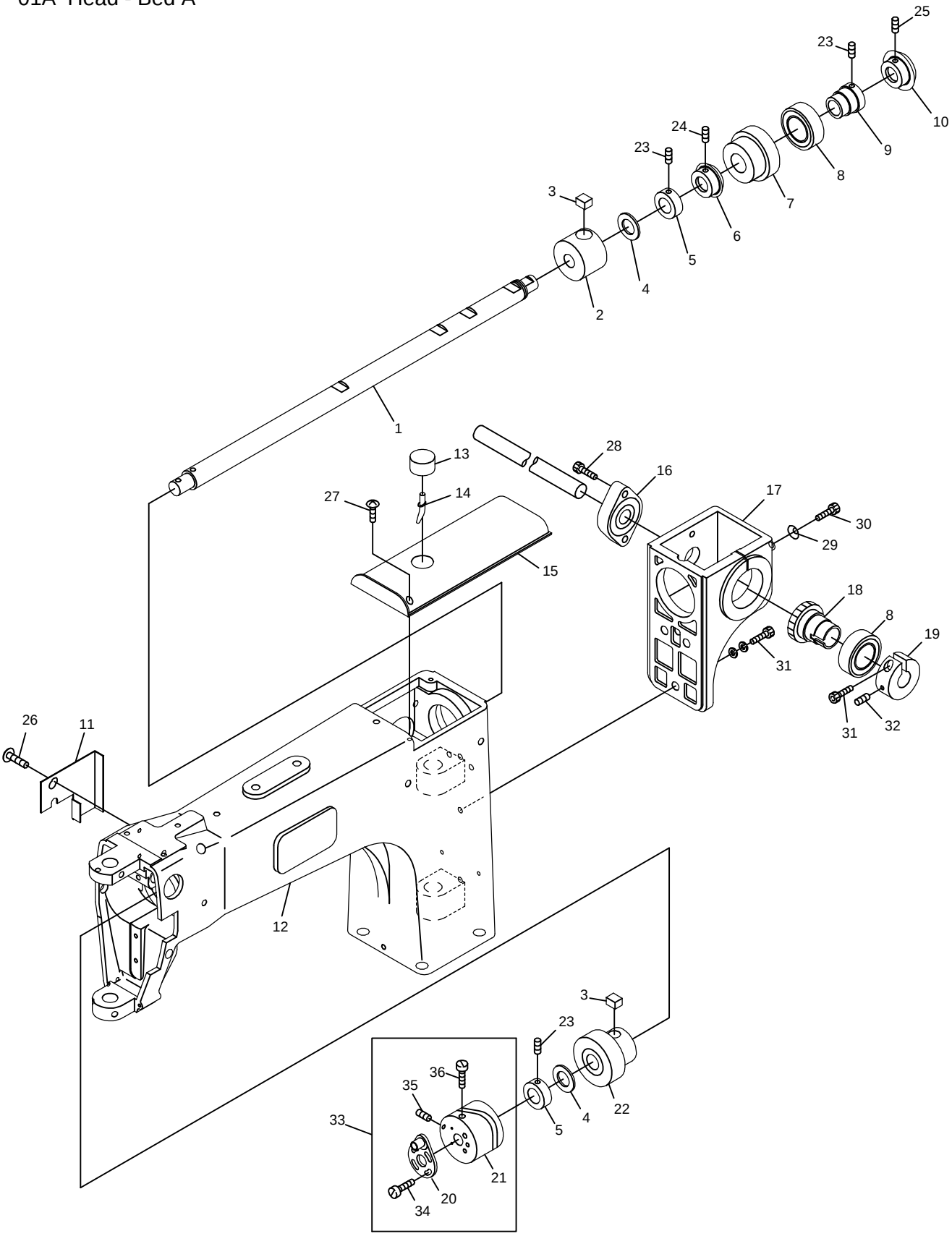

BENS-YN/YS BENS-YN/YS-L BENY-YN/YS BENSME-YN/YS BENYME-YN/YS
BENR-YN/YS BENR-YN/YS-L BENB-YN/YS BENRME-YN/YS BENBME-YN/YS

01A Head - Bed A

ITEM	LIST NO.	DESCRIPTION	Q'TY	NOTE
1	KL220000	Upper shaft	H×1	
2	KL220030	Upper shaft middle metal	H×1	
3	KL220130	Oil felt B	H×2	
4	HP231390	Thrust washer(Upper shaft gear)	H×2	
5	KL220080	Upper shaft collar	H×2	
6	KF220130	Bevel gear(Upper shaft)	H×1	
7	KL220040	Upper shaft rear bearing case	H×1	
8	A9010017	Bearing(6004ZZ)	H×2	
9	KL220090	Upper shaft rear bearing collar	H×1	
10	KL220100	Upper shaft gear(Spiral bevel M1.5-25R)	H×1	
11	KL250051	Arm side cable cover	H×1	
12	KB210160	Arm	H×1	
13	KL220150	Oil felt D	H×1	
14	KC251330	Oil core L=75	H×1	
15	KL250040	Arm top cover	H×1	
16	HP321140	Upper shaft connecting shaft unit	H×1	
17	KL210140	Arm gear case	H×1	
18	KL320000	Connecting gear(Spiral bevel M1.5-25L)	H×1	
19	KL320020	Connecting gear clamp f19	H×1	
20	KB230050	90°crank	H×1	
21	KB230030	Take up lever cam K6	H×1	For small bobbin
	KB230040	Take up lever cam L1	H×1	For middle bobbin
22	KL220022	Upper shaft front metal	H×1	
23		Hex.socket set screw M6×6		
24		Screw(SM1/4 40×4)		
25		Hex.socket set screw M6×6(With adhesion)		
26		Binding screw M4×8		
27		Truss screw M4×10		
28		Hex.socket bolt M6×35(Spring washer)		
29		Disk spring M6	1	
30		Hex.socket bolt M6×60	H×1	
31		Hex.socket bolt M6×25		
32		Hex.socket set screw M6×10		
33	KB230011	Take up lever cam K6 90°(9°inclination)	H×1	For small bobbin
	KB230021	Take up lever cam L1 90°(9°inclination)	H×1	For middle bobbin
34	A9012007	Screw(SM11/64 40×10)	H×1	
35		Screw		
		(SM11/64 28×10) lock		
36	KF230420	Take up lever cam set screw	H×1	

01B Head - Bed B

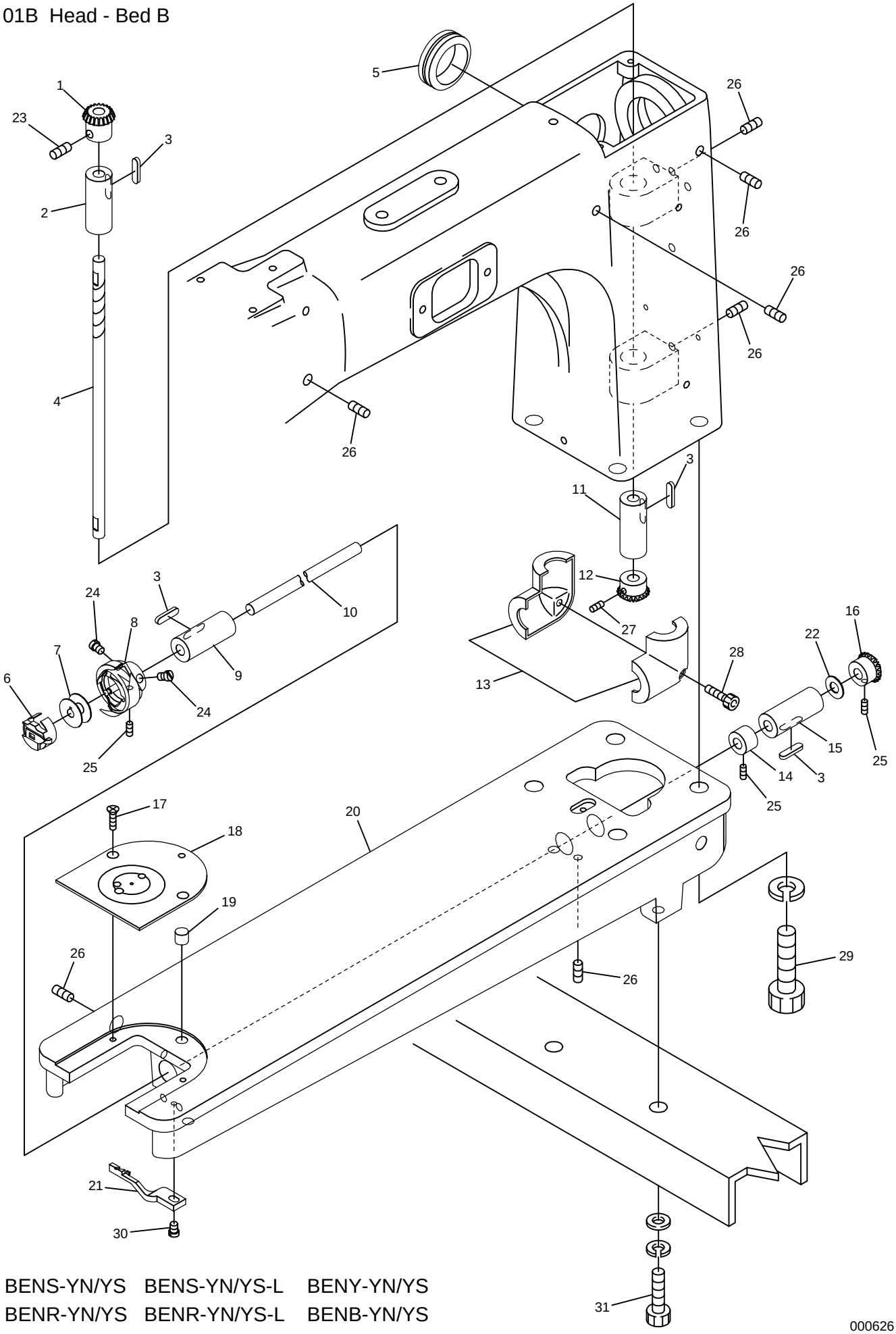

BENS-YN/YS BENS-YN/YS-L BENY-YN/YS
BENR-YN/YS BENR-YN/YS-L BENB-YN/YS

000626

01B Head - Bed B

ITEM	LIST NO.	DESCRIPTION	Q'TY	NOTE
1	KF220460	Bevel gear(Vertical shaft upper)	H×1	
2	KL220050	Vertical metal(Upper)	H×1	
3	KL220140	Oil felt C	H×1	
4	KL220010	Vertical shaft	H×1	
5	A9014063	Grommet C-30-SG-36A	H×1	
6	KF220981	Bobbin case SC35-BNS-3	H×1	For small bobbin
	KF220302	Bobbin case BC-DBM(Z2)-NBL5	H×1	For middle bobbin
7	KF220530	Bobbin	H×1	For small bobbin
	KF220421	Bobbin HSM(DBM)	H×1	For middle bobbin
8	KF220710	Rotating hook complete KHS12-RYPBNW	H×1	For small bobbin
	HB220010	Rotating hook complete(HSM-A-MQTS)	H×1	For middle bobbin
9	KF220230	Lower shaft metal(Front)	H×1	
10	KC220210	Lower shaft	H×1	
11	KL220060	Vertical shaft metal(Lower)	H×1	
12	KF220470	Bevel gear(Vertical shaft lower)	H×1	
13	KF220271	Gear cover set	H×1	
14	KF220290	Lower shaft collar	H×1	
15	KL220070	Lower shaft metal(Rear)	H×1	
16	KF220480	Bevel gear(Lower shaft)	H×1	
17	KF250900	Throat plate set screw(SM11/64 40×7)	H×2	
18	KV250010	Throat plate	H×1	
19	KL220120	Oil felt A	H×1	
20	KN210210	Bed	H×1	For small bobbin
	KB210180	Bed	H×1	For middle bobbin
21	HV270370	Rotating hook bobbin case holder(MK6R2)	H×1	
22	HT220061	Thrust washer(Lower shaft)	H×1	
23		Screw(SM1/4 40×4)		
24		Screw(SM11/64 40×5)		
25		Screw(SM11/64 40×4)		
26		Hex.socket set screw M6×8		
27		Screw(SM1/4 40×4)		
28		Hex.socket bolt M5×25		
29		Hex.bolt M12×35		
30		Screw(SM11/64 40×10)		
31		Hex.socket screw M8×22		

02A Thread cut A

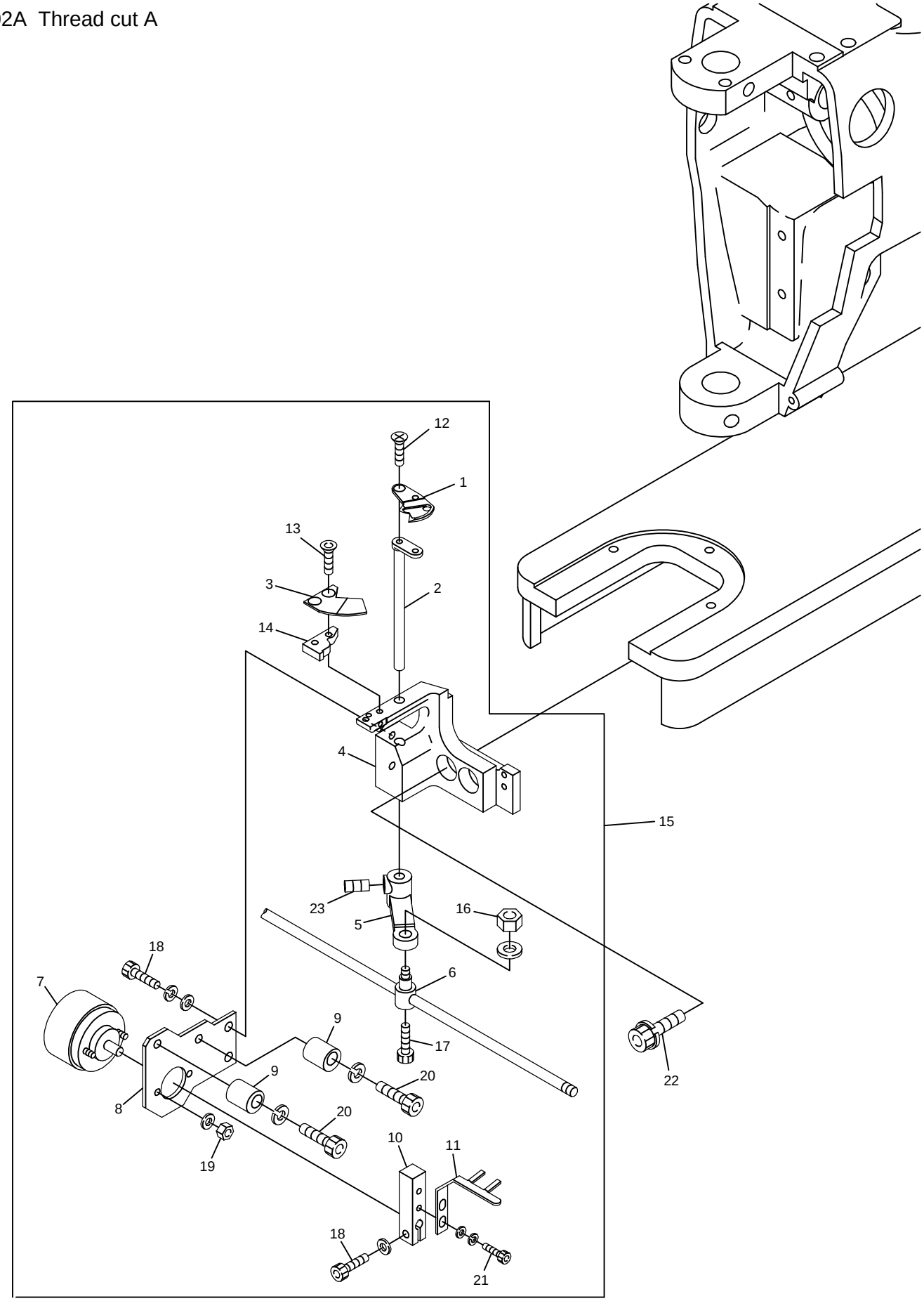

BENS-YN/YS BENS-YN/YS-L BENY-YN/YS
BENR-YN/YS BENR-YN/YS-L BENB-YN/YS

02A Thread cut A

ITEM	LIST NO.	DESCRIPTION	Q'TY	NOTE
1	HV270340	Driving knife(MK6R2)	H×1	
2	HV270330	Knife driving lever(MK6R2)	H×1	
3	HV270310	Fixed knife G	H×1	
4	HV270070	Thread cut knife base	H×1	Small bobbin
	HV270410	Thread cut knife base(MK6 middle bobbin)	H×1	Middle bobbin
5	HV270090	Knife lever	H×1	
6	KF230640	Lock connecting bar clamp	H×1	
7	A9056022	Rotary solenoid(3EL25-33×3×8×9)	H×1	
8	HV270030	Solenoid stay	H×1	
9	KN272401	Stopper eccentric	H×2	
10	HV270100	Solenoid lever	H×1	
11	HV270020	Upper thread separate hook	H×1	
12	HV270440	Drive knife set screw(MK6)	H×1	
13	HV270420	Fixed knife set screw(MK6R2)	H×2	
14	HV270320	Fixed knife base(MK6R2)	H×1	
15	HV270380	Thread cut a'ssy(MK6R2)	H×1	Small bobbin
	HV270430	Thread cut a'ssy(MK6R2 middle bobbin)	H×1	Middle bobbin
16		Hex.nut M4		
17		Hex.socket bolt M4×8		
18		Hex.socket bolt M4×10		
19		Hex.nut M3		
20		Hex.socket bolt M4×20		Small bobbin
		Hex.socket button bolt M4×20L		Middle bobbin
21		Hex.socket bolt M3×10		
22		Hex.socket bolt M6×20(Spring washer)		
23		Hex.socket set screw M5×6		

02B Thread cut B

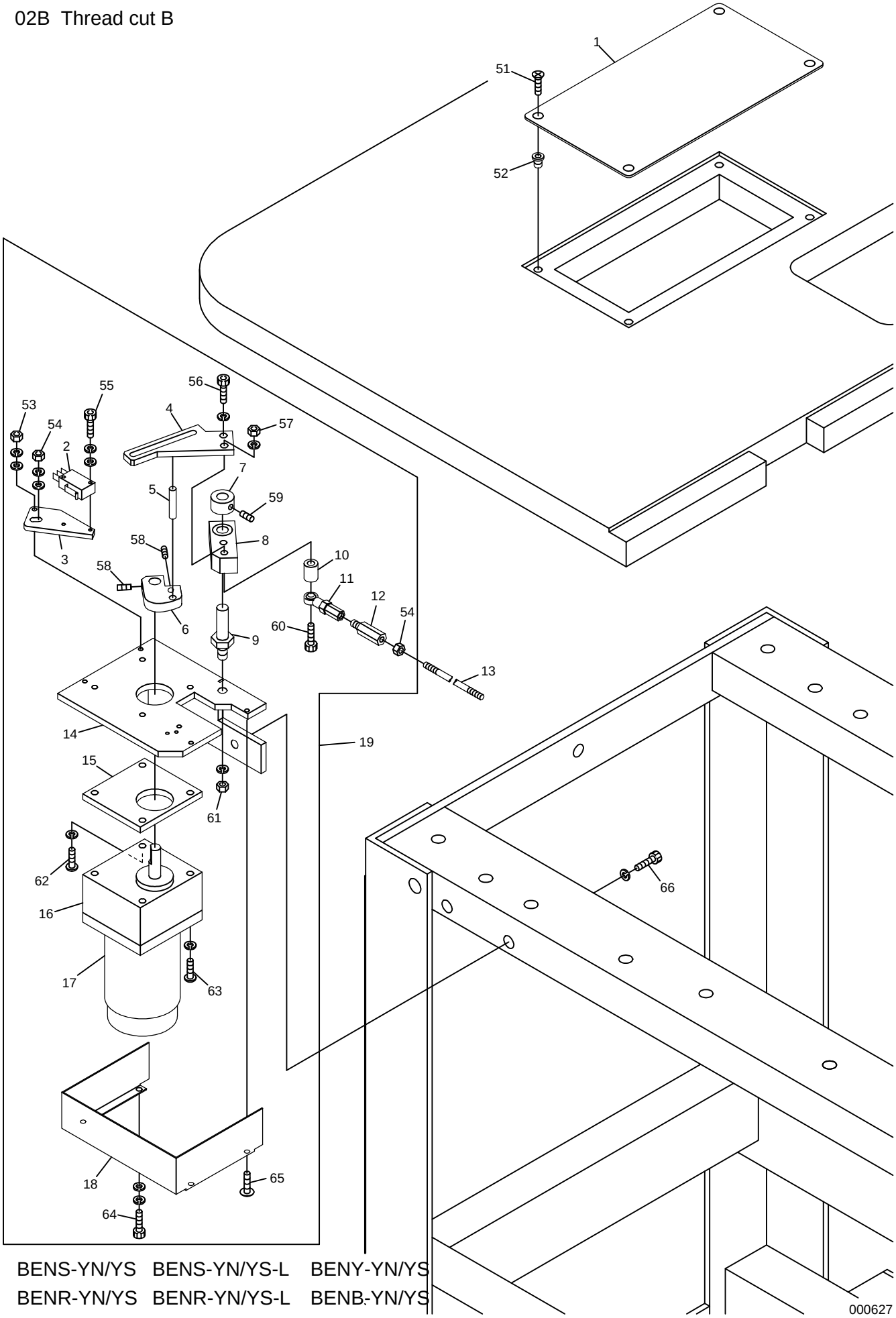

BENS-YN/YS BENS-YN/YS-L BENY-YN/YS
BENR-YN/YS BENR-YN/YS-L BENB-YN/YS

02B THREAD CUT B

ITEM	LIST NO.	DESCRIPTION	Q'TY	NOTE
1	KC271440	Drive section service cover	1	
2	A9052078	Micro switch(D2VW-01L2A-1)	1	
3	HV270280	LS bracket	1	
4	HV270360	Motor lever(MK6R2)	1	
5	KN272350	Drive pin f6(L=35)	1	
6	HV270350	Drive cam(MK6R2)	1	
7	KC330180	Collar f10	1	
8	KN271782	Drive lever	1	
9	KN271750	Motor lever rotary shaft	1	
10	KN271800	Drive lever collar	1	
11	A9012002	Uniball joint(PR-6)	1	
12	HH330760	Hex.connecting bar	1	
13	KC330410	Lock connecting rod(2M)	2	
14	KV270240	Motor bracket	1	
15	KN271720	Motor spacer	1	
16	A9065075	Gear head(7RH1-D25×302)	1	
17	A9065074	Reversible motor(RM-H7A15 PMP-U)	1	
18	HV270220	Motor bracket cover	1	
19	KV270030	Thread cutter central drive a'ssy(MK6R2)	1	
51		Flush screw M4×8(Undercut)		
52		Rag nut(C) M4		
53		Hex.nut M4		
54		Hex.nut M5		
55		Hex.socket bolt M3×15		
56		Hex.socket bolt M6×12		
57		Hex.nut M6		
58		Hex.socket set screw M5×8		
59		Hex.socket set screw M5×6		
60		Hex.socket bolt M6×55		
61		Hex.nut M8		
62		Pan screw M5×75		
63		Pan screw M5×65		
64		Hex.socket bolt M4×18		
65		Truss screw M4×8		
66		Hex.socket bolt M8×20		

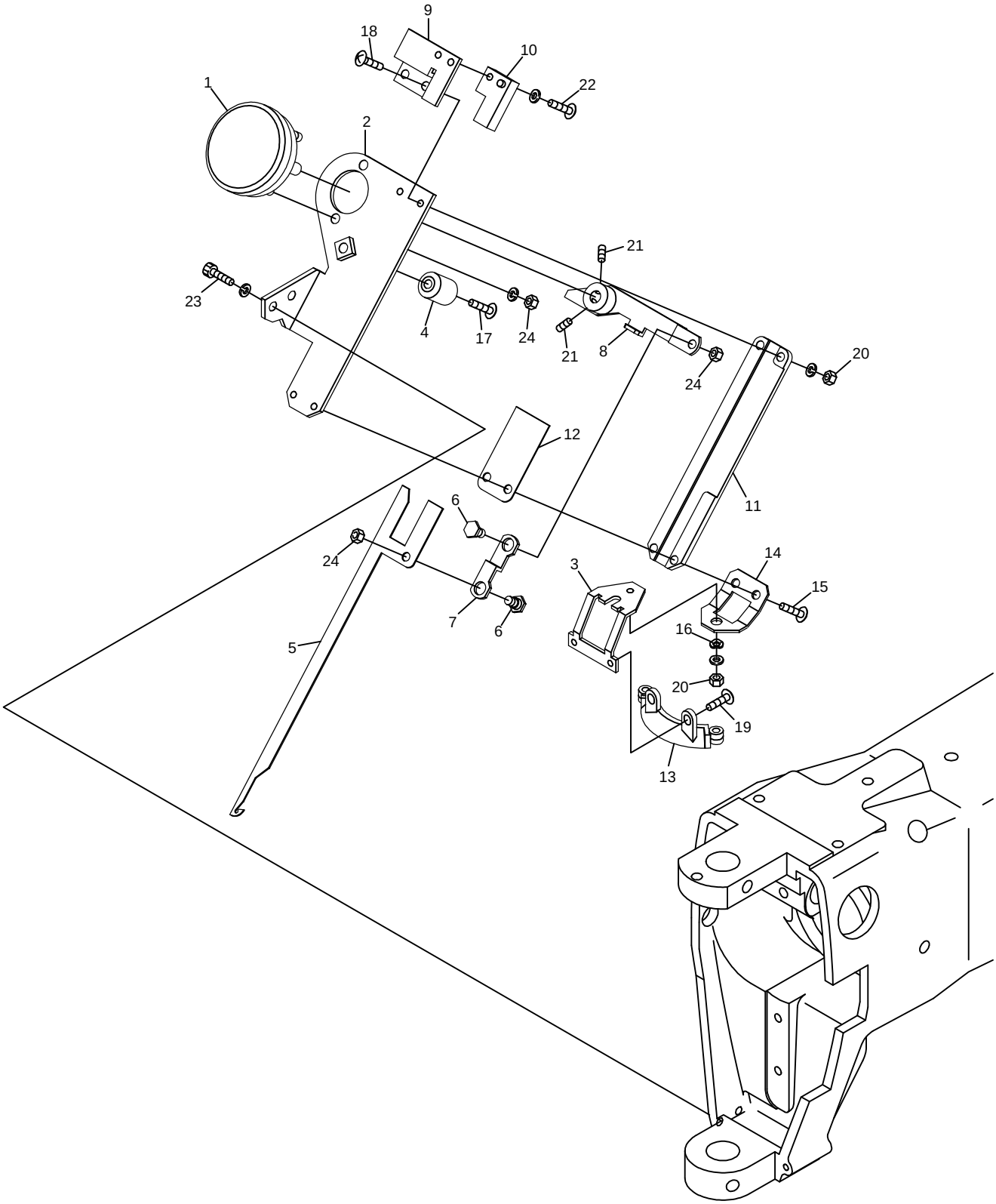

BENS-YN/YS BENS-YN/YS-L BENY-YN/YS BENSME-YN/YS BENYME-YN/YS
BENR-YN/YS BENR-YN/YS-L BENB-YN/YS BENRME-YN/YS BENBME-YN/YS

02C THREAD CUT C

ITEM	LIST NO.	DESCRIPTION	Q'TY	NOTE
1	A9056031	Rotary solenoid 4ER67.5-33×3×8×9 M970385R3(ETL)	H×1	
2	KL270081	Thread away base	H×1	
3	HT270070	Thread guard disk fixing stay	H×1	
4	KN272401	Stopper eccentric	H×1	
5	KL270101	Thread away hook	H×1	
6	KL270130	Lever connecting pin	H×1	
7	KL270120	Connecting plate	H×1	
8	KL270110	Thread away solenoid lever	H×1	
9	KL270260	Switch stay	H×1	
10	A9052028	Proximity switch(RS-603)	H×1	
11	KL270091	Thread away hook guide	H×1	
12	KL270450	Hook guide plate	H×1	
13	KL270400	Thread guard disk CMP	H×1	
14	HT270110	Rotary shaft fixing stay	H×1	
15		Truss screw M3×7		
16	A9013066	Wave washer WW-5	H×1	
17		Truss screw M4×16		
18		Truss screw M3×10		
19		Truss screw M3×4		
20		Hex.nut M3		
21		Hex.socket set screw M4×8		
22		Truss screw M3×6		
23		Hex.socket bolt M4×12		
24		Hex.nut M4		

02D Thread cut D

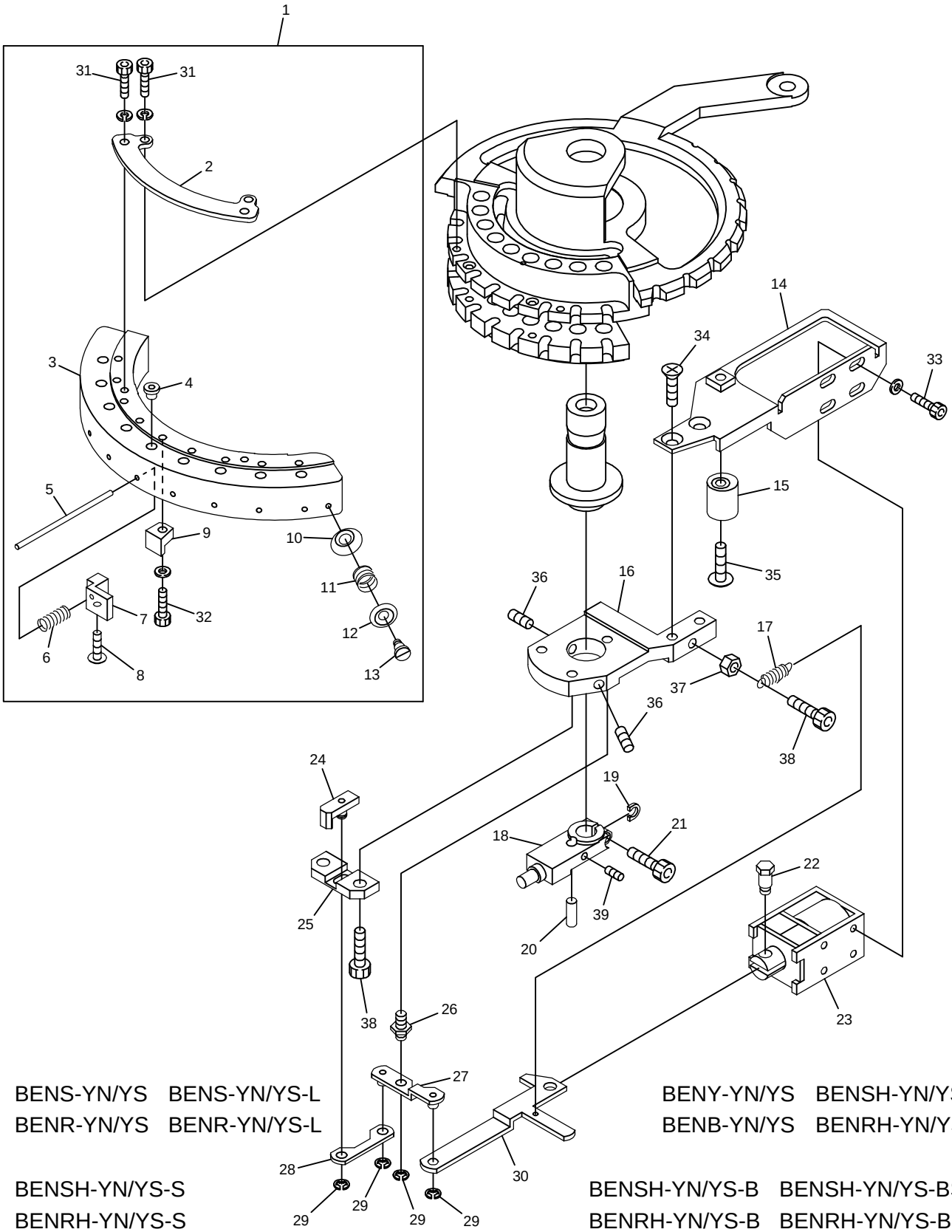

BENS-YN/YS BENS-YN/YS-L
BENR-YN/YS BENR-YN/YS-L

BENY-YN/YS BENSH-YN/YS
BENB-YN/YS BENRH-YN/YS

BENSH-YN/YS-S
BENRH-YN/YS-S

BENSH-YN/YS-B BENSH-YN/YS-BS
BENRH-YN/YS-B BENRH-YN/YS-BS

BENSH-YN-KS BEDSH-YN/YS-BS BENYH-YN BENYH-YN-C BENSHE-YN/YS BENYHE-YN
BENRH-YN-KS BENBH-YN BENRHE-YN/YS BENBHE-YN

BENYHE-YN-B BENYHE-YN-C
BENBHE-YN-B BENBHE-YN-C

02D THREAD CUT D

ITEM	LIST NO.	DESCRIPTION	Q'TY	NOTE
1	HT270030	Thread support apron a'ssy(YN)	H×1	YN
	HT270140	Thread support apron a'ssy(YS-2)	H×1	YS
2	HT270010	Thread support apron fixing stay	H×1	
3	HT270001	Thread support apron(YN)	H×1	YN
	HT270150	Thread support apron(YS-2)	H×1	YS
4	KF230582	Thread way guide(For thread support apron)		YN…H×9,YS…H×7
5	HT270040	Thread support shaft		YN…H×9,YS…H×7
6	KC270271	Support spring		YN…H×9,YS…H×7
7	HT270021	Thread support clamp		YN…H×9,YS…H×7
8	HT270063	Thread support clamp set screw(YN)		YN…H×9,YS…H×7
9	KC270292	Thread support block		YN…H×9,YS…H×7
10	KF250220	Thread guard disk	H×2	
11	KF250241	Thread hook support spring	H×2	
12	KF250231	Thread guard spring pressure	H×2	
13	KF250250	Thread hook support shaft screw	H×2	
14	KL270070	Solenoid stay	H×1	
15	KN272401	Stopper eccentric	H×1	
16	KL270000	Fixing base	H×1	
17	KL270520	Return spring	H×1	
18	HT230361	Drive shaft fixing plate	H×1	
19	HT230830	Washer for drive shaft fixing plate	H×1	
20	HT230350	Thread guard disk fixing pin	H×1	
21	HT230640	Drive shaft fixing clamp bolt	H×1	
22	KC270101	Solenoid pin	H×1	
23	A9056037	Keep solenoid TDS-K10SL(With cover)	H×1	
24	HT270120	Thread support slider	H×1	
25	HT270100	Slide base	H×1	
26	KL270040	Lever rotary shaft	H×1	
27	HT270090	Solenoid lever	H×1	
28	HT270080	Drive plate	H×1	
29	A9012127	E-ring f3	H×4	
30	KL270060	Lever connecting plate	H×1	
31		Hex.socket bolt(Plating) M3×6 (With spring washer)		
32		Hex.socket bolt M3×10(With plain washer)		
33		Hex.socket bolt M3×6		
34		Flush screw M4×8		
35		Truss screw M4×16		
36		Hex.socket set screw M4×8		
37		Hex.nut M4		
38		Hex.socket bolt M4×8		
39		Set screw M3×5		

03 Take up lever

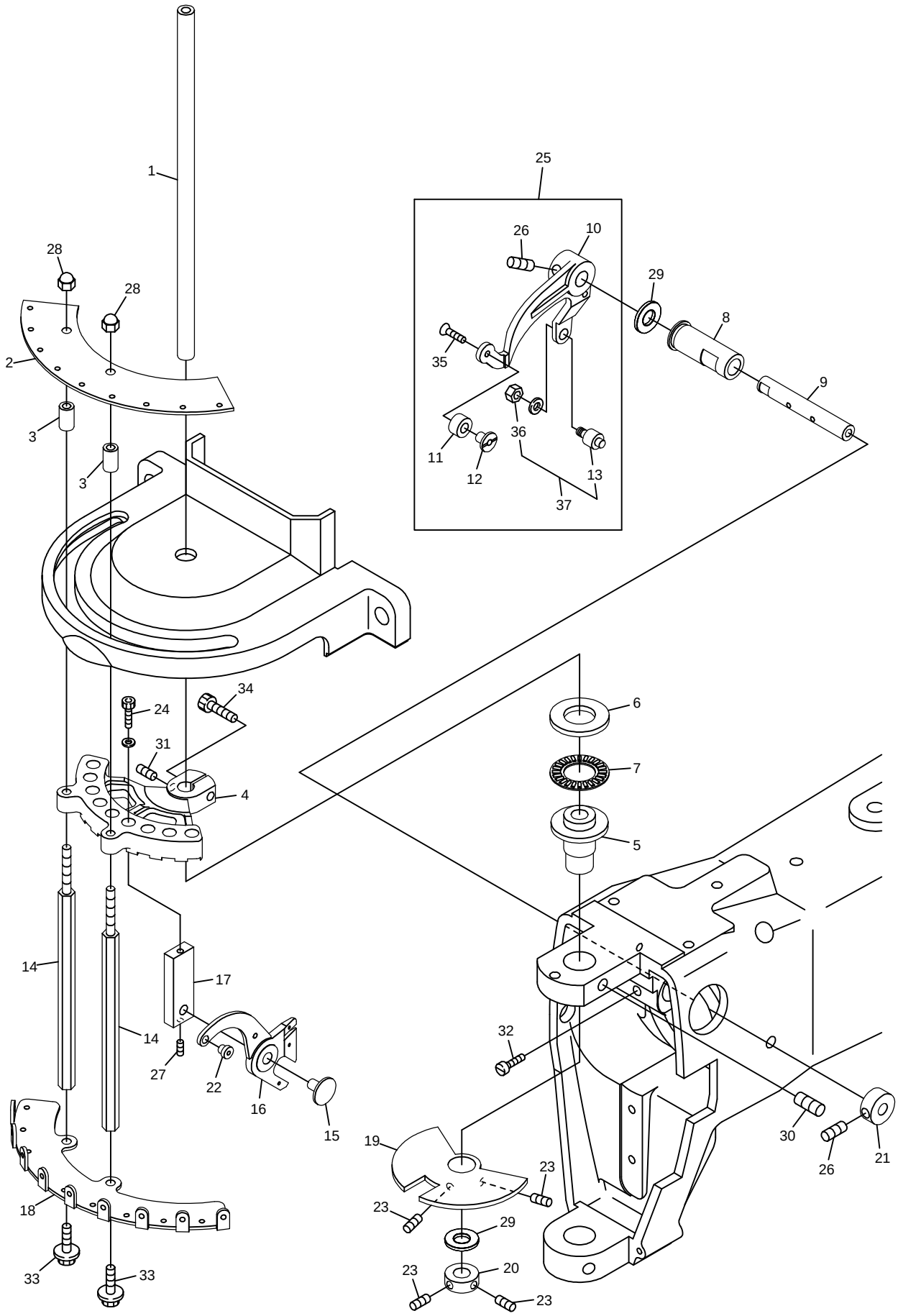

BENS-YN/YS BENS-YN/YS-L BENY-YN/YS
BENR-YN/YS BENR-YN/YS-L BENB-YN/YS

000622

03 TAKE UP LEVER

ITEM	LIST NO.	DESCRIPTION	Q'TY	NOTE
1	KS230010	Driving shaft	H×1	
2	HT240000	Thread guide plate	H×1	
3	KB240021	Thread guide fixing collar	H×2	
4	KT230020	Take up fixing bracket	H×1	
5	KB230090	Driving shaft upper metal	H×1	
6	A9011152	Thrust needle bearing inner ring(WS1528)	H×1	
7	A9011021	Thrust needle bearing NTB-1528	H×1	
8	KB230100	Take up lever driving shaft metal	H×1	
9	KB230110	Take up lever driving shaft	H×1	
10	KT230032	Take up lever driving lever	H×1	
11	HT230090	Take up lever driving roller	H×1	
12	HT230100	Take up lever driving roller shaft	H×1	
13	KF230680	Cam followers(KR×4×7.9×15-1P×1)	H×1	
14	KB240010	Thread guide fixing rod	H×2	
15	HT230080	Take up lever shaft		YN…H×9, YS…H×7
16	KT230041	Take up lever a'ssy(YN multi)		YN…H×9, YS…H×7
17	KT230010	Take up lever base		YN…H×9, YS…H×7
18	HT240010	Thread guard	H×1	
19	KT230000	Take up lever stocker	H×1	
20	HB230160	Driving shaft set collar	H×1	
21	HB230270	Needle bar driving lever fixing pin set collar	H×1	
22	HB230751	Take up lever thread guide		YN…H×9, YS…H×7
23		Hex.socket set screw M4×4(With adhesion)		
24		Hex.socket bolt M3×14		
25	KT230052	Take up lever drive lever a'ssy	H×1	
26		Hex.socket set screw M5×6(With adhesion)		
27		Hex.socket set screw M3×4(With adhesion)		
28		Cap nut M4		
29	A9012164	Thrust washer(R-TW0851)	H×2	
30		Hex.socket set screw M6×6		
31		Hex.socket set screw M4×5(Cone point)		
32		Screw(SM11/64×11)		
33		Hex.socket bolt M4×6(With plain washer)		
34		Hex.socket bolt M4×15		
35	HB230650	Flush screw(With adhesion)	H×1	
36		Hex.nut M4(With spring washer)		
37	KF230501	Take up lever roller a'ssy	H×1	

04A Needle bar A

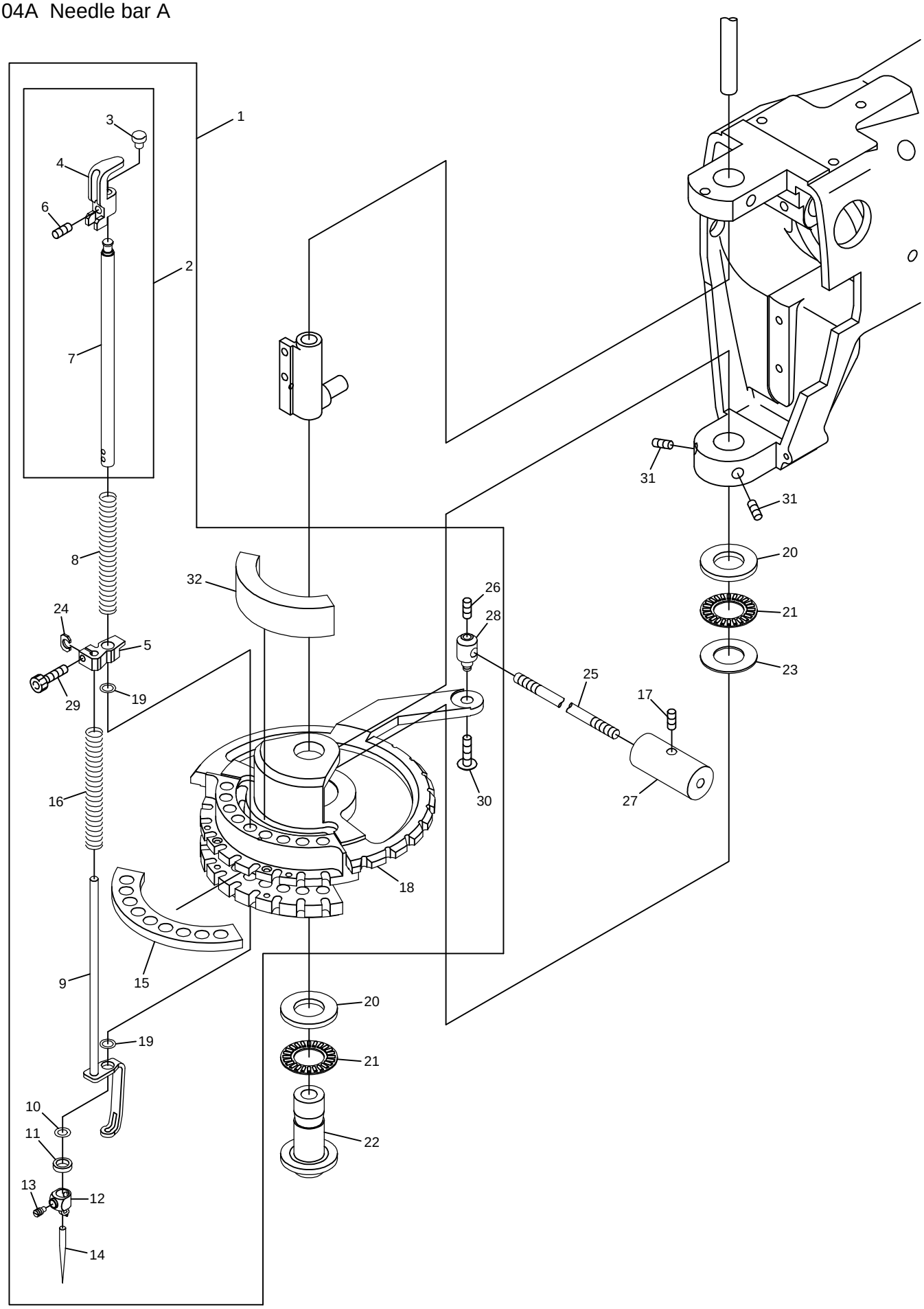

BENS-YN/YS BENY-YN/YS
BENR-YN/YS BENB-YN/YS

04A NEEDLE BAR A

ITEM	LIST NO.	DESCRIPTION	Q'TY	NOTE
1	HT230800	Rotary plate a'ssy	H×1	YN
	KT230090	Rotary plate a'ssy	H×1	YS
2	HT230810	Needle bar a'ssy		YN…H×9,YS…H×7
3	HT230130	Needle bar cap		YN…H×9,YS…H×7
4	HT230151	Needle bar guide		YN…H×9,YS…H×7
5	HT230330	Cloth hold set clamp		YN…H×9,YS…H×7
6		Hex.socket set screw M4×4		
7	HT230041	Needle bar		YN…H×9,YS…H×7
8	KV230040	Needle bar spring(Upper,thick cloth)		YN…H×9,YS…H×7
9	HT230143	Cloth hold(YN with ditch)		YN…H×9,YS…H×7
10	KF230910	O-ring(AN6227-5)		YN…H×9,YS…H×7
11	HT230120	Washer 2.4		YN…H×9,YS…H×7
12	HT230670	Needle clamp		YN…H×9,YS…H×7
13	KF230240	Needle clamp screw(SM9/64 40)		YN…H×9,YS…H×7
14	FN070011SNY	Needle(DBXK5-NY11S)		YN…H×9,YS…H×7
15	HT230111	Rotary plate felt	H×1	
16	HT230064	Needle bar spring Lower plating		YN…H×9,YS…H×7
17		Hex.socket set screw M5×5		
18	HT230570	Rotary plate	H×1	
19	A9014055	O-ring(1AS-7)		YN…H×18,YS…H×14
20	A9011023	Thrust bearing outer ring(GS1528)	H×2	
21	A9011021	Thrust bearing(NTB-1528)	H×2	
22	HB230140	Drive shaft lower metal	H×1	
23	A9011022	Thrust washer	H×1	
24	HT230263	Washer for set clamp		YN…H×9,YS…H×7
25	KC330410	Lock connecting rod(L=2000)	4	
26		Hex.socket set screw M4×4		
27	KF330381	Thread change control grip	2	
28	HT230180	Rotary plate joint pin	H×1	
29		Hex.socket bolt M3×8		
30		Hex.socket button bolt M4×5		
31	A9012053	Hex.socket set screw(With steel ball) M6×0.75×8	H×2	
32	LB230080	Cloth set support rubber		YN…H×9,YS…H×7

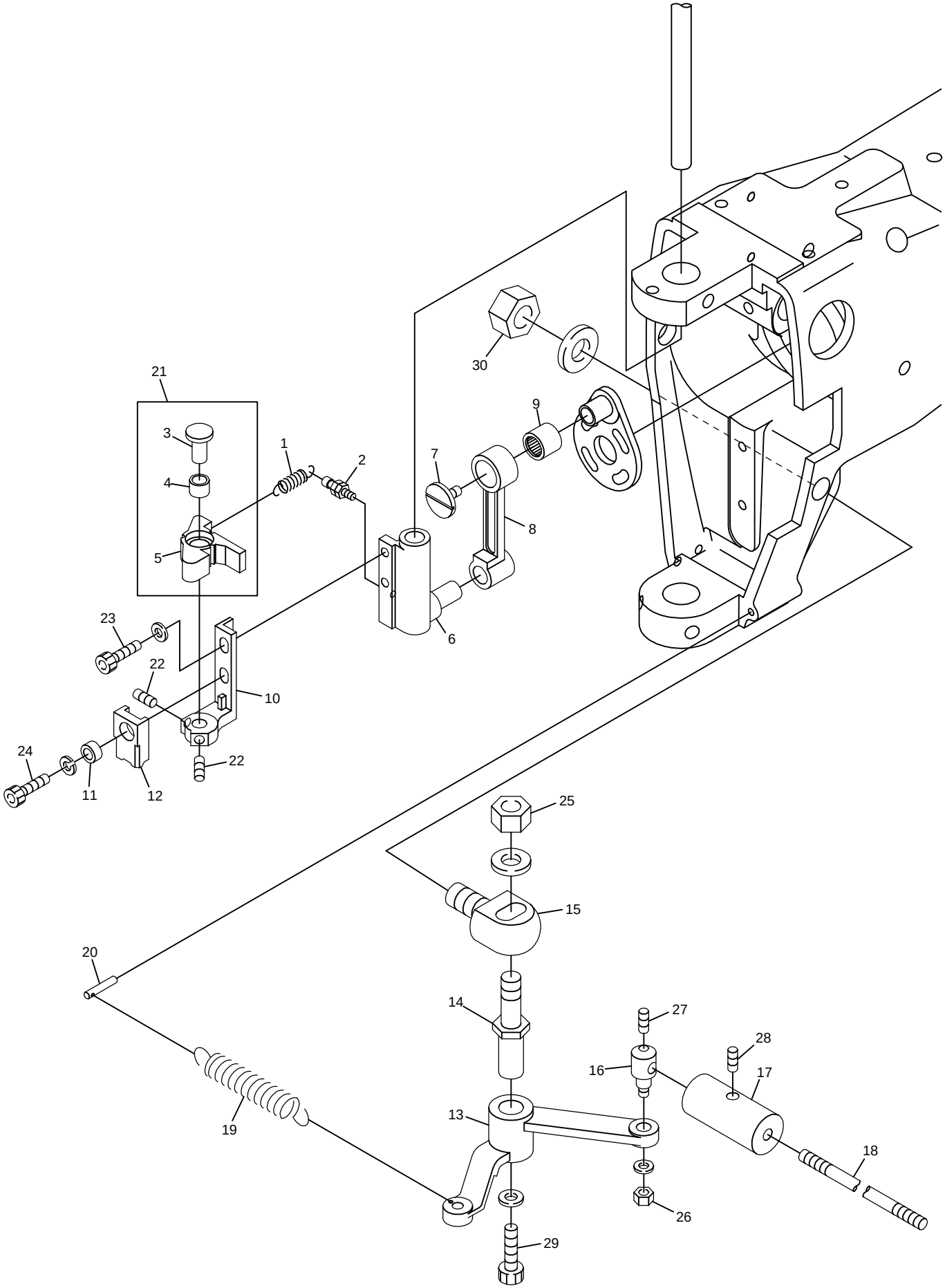

BENS-YN/YS BENY-YN/YS BENSME-YN/YS BENYME-YN/YS
BENR-YN/YS BENB-YN/YS BENRME-YN/YS BENBME-YN/YS

04B HEAD - BED B

ITEM	LIST NO.	DESCRIPTION	Q'TY	NOTE
1	HB230401	Needle bar driver return spring	H×1	
2	HB230590	Set screw for return spring	H×1	
3	HB230390	Needle bar driver fixing pin	H×1	
4	A9012190	DU-bush(MB0606DU)	H×1	
5	HB230383	Needle bar driver	H×1	
6	KB230080	Needle bar driver guide block	H×1	
7	KB230070	90°crank counter clockwise screw	H×1	
8	KB230060	Crank rod	H×1	
9	A9011115	Needle bearing(K9×12×10T2)	H×1	
10	HB230372	Needle bar driver fixing base	H×1	
11	HB230420	Needle bar driver stopper set collar	H×1	
12	HB230414	Needle bar driver stopper	H×1	
13	KL230280	Lock lever(With roller)	H×1	
14	KF230630	Lock lever shaft	H×1	
15	KF230650	Lock lever bracket	H×1	
16	KF230640	Lock connecting bar clamp	H×1	
17	KF330381	Thread change control grip	2	
18	KC330410	Lock connecting rod(L=2000)		
19	KF230661	Lock lever spring	H×1	
20	KF230670	Lock lever spring pin	H×1	
21	HT230201	Needle bar driver(A'ssy)	H×1	
22		Hex.socket set screw M4×4(With adhesion)		
23		Hex.socket bolt M4×12		
24		Hex.socket bolt M4×15		
25		Hex.nut M8		
26		Hex.nut M4		
27		Hex.socket set screw M4×6		
28		Hex.socket set screw M4×5		
29		Hex.socket bolt M5×10		
30		Hex.nut M10		

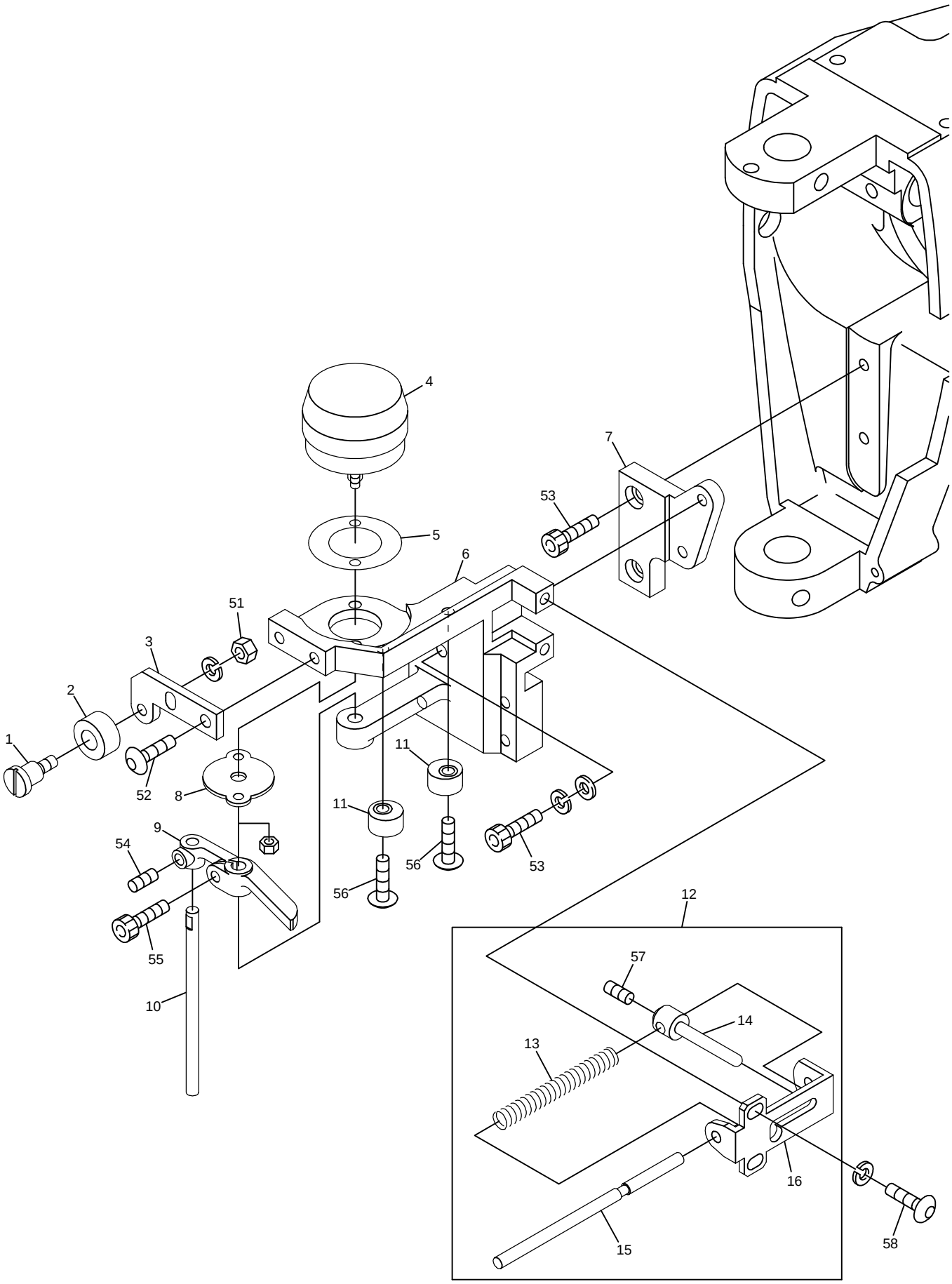

BENS-YN/YS BENS-YN/YS-L BENY-YN/YS BENSME-YN/YS BENYME-YN/YS
BENR-YN/YS BENR-YN/YS-L BENB-YN/YS BENRME-YN/YS BENBME-YN/YS

990722

05 JUMP

ITEM	LIST NO.	DESCRIPTION	Q'TY	NOTE
1	HB230460	Needle bar stopper fixing pin	H×1	
2	HT230220	Needle bar stopper	H×1	
3	KB230170	Needle bar stopper bracket	H×1	
4	A9056027	Rotary solenoid 3ER35-35×3×8×9 M960372R(ETL)	H×1	
5	HB230560	Sheet for rotary solenoid	H×1	
6	KB240030	Jump solenoid fixing bracket	H×1	
7	KB210170	Solenoid bracket fixing base	H×1	
8	HB230580	Solenoid noise prevention cover	H×1	
9	HB240020	Jump solenoid lever	H×1	
10	HB240030	Jump solenoid lever pin	H×1	
11	HB240041	Jump eccentric	H×2	
12	KT240010	Manual cancel a'ssy	H×1	
13	HB240110	Cancel return spring	H×1	
14	HT240580	Manual cancel pin	H×1	
15	HT240570	Cancel rod	H×1	
16	KB240040	Cancel bracket	H×1	
51		Hex.nut M4		
52		Hex.socket button bolt M4×10		
53		Hex.socket bolt M4×12		
54		Hex.socket set screw M4×4(With adhesion)		
55		Hex.socket bolt M4×8		
56		Hex.socket button bolt M4×12 (With adhesion)		
57		Hex.socket set screw(Flat point) M4×4		
58		Hex.socket button bolt M4×5		

06A-1 Thread guide A (Standard)(YN)

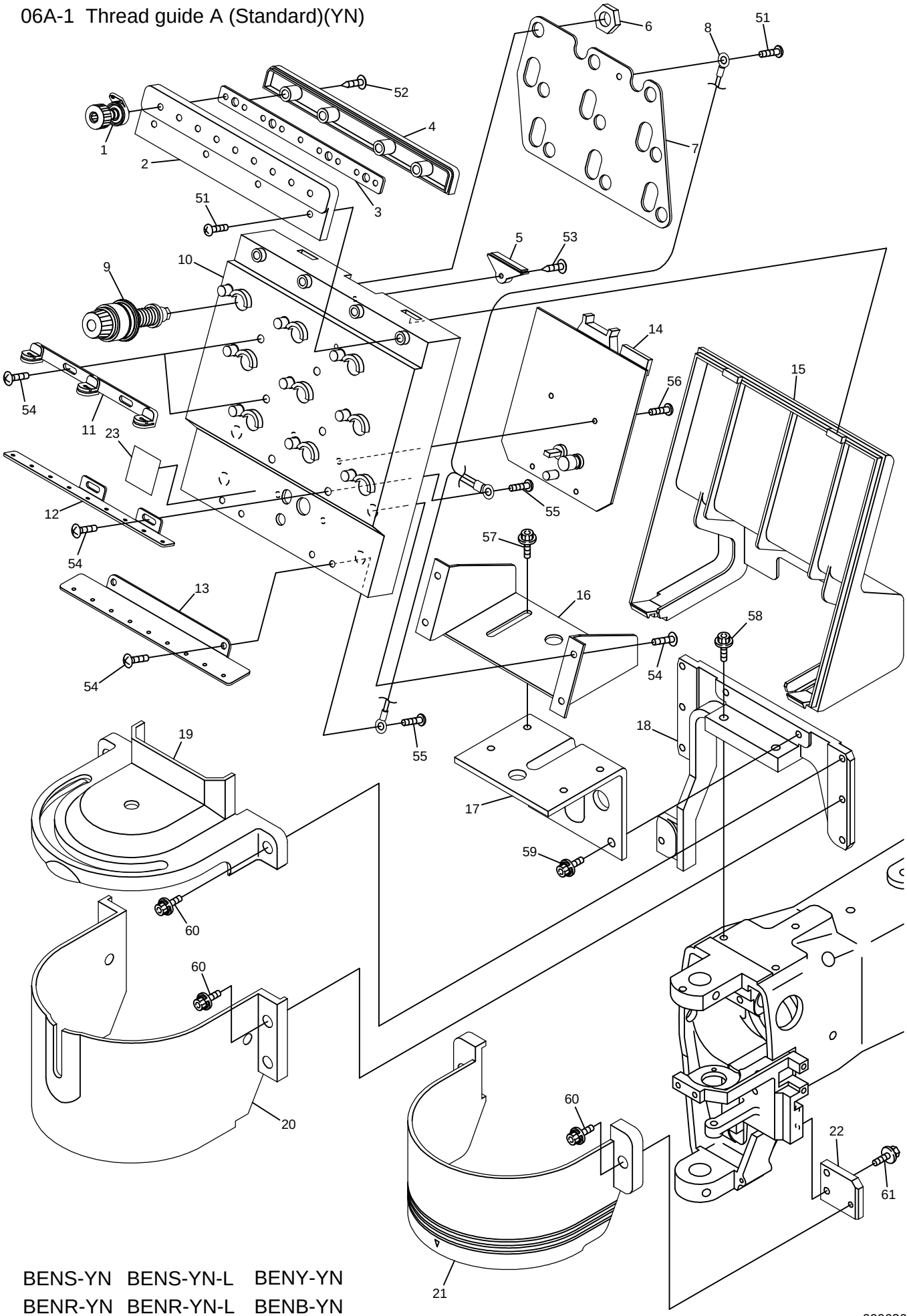

BENS-YN BENS-YN-L BENY-YN
BENR-YN BENR-YN-L BENB-YN

000626

06-A-1 THREAD GUIDE A STANDARD (YN)

ITEM	LIST NO.	DESCRIPTION	Q'TY	NOTE
1	HT240340	Second guide for upper tension	H×9	Except for NS/NR-YN-L
	LB240070	Second guide for upper tension (Without pin)	H×9	NS/NR-YN-L
2	HT240210	First thread guid fixing case	H×1	
3	HT240230	First thread guid fixing base	H×1	
4	HT240220	First thread guid fixing cover	H×1	
5	HT240240	Blind cap	H×1	
6	HT240180	SM-nut	H×9	
7	HT240160	Tension earth plate	H×1	
8	A9053078	Tension base earth cable YN	H×1	
9	HT240526	Dial tension a'ssy(YN)	H×9	Except for NS/NR-YN-L
	LB240060	Dial type tension unit a'ssy (YN,thick type)	H×9	NS/NR-YN-L
10	HT240121	Tension base case a'ssy	H×1	
11	HT240062	First thread guide(YN)	H×2	
12	HT240392	Thread guide plate(YN)	H×1	
13	HT240021	Second thread guide plate(YN)	H×1	
14	EBY01150	4620 Head board for N	H×1	
15	HT240130	Tension base cover	H×1	
16	HT240140	Tension base	H×1	
17	KB240051	Tension base bracket{Multi(NS)}	H×1	
18	KB250050	Sewing head cover fixing bracket	H×1	
19	KB250020	Sewing head cover(A)	H×1	
20	KB250030	Sewing head cover(B)	H×1	
21	KB250040	Sewing head cover(C)	H×1	
22	KB250060	Sewing head cover fixing stay	H×1	
23		Number label	H×1	
51		Pan screw M3×6		
52		Tapping screw ? M3×12		
53		Tapping screw M3×12		
54		Truss screw M4×6		
55		Pan screw M4×6		
56		Pan head tapping screw B tight M3×8		
57		Hex.socket bolt with washers M5×10		
58		Hex.socket bolt with washers M5×20		
59		Hex.socket bolt with washers M5×15		
60		Hex.socket bolt with washers M4×6		
61		Hex.socket bolt M4×15(With washers)		

06A-2 Thread guide A (Standard)(YS)

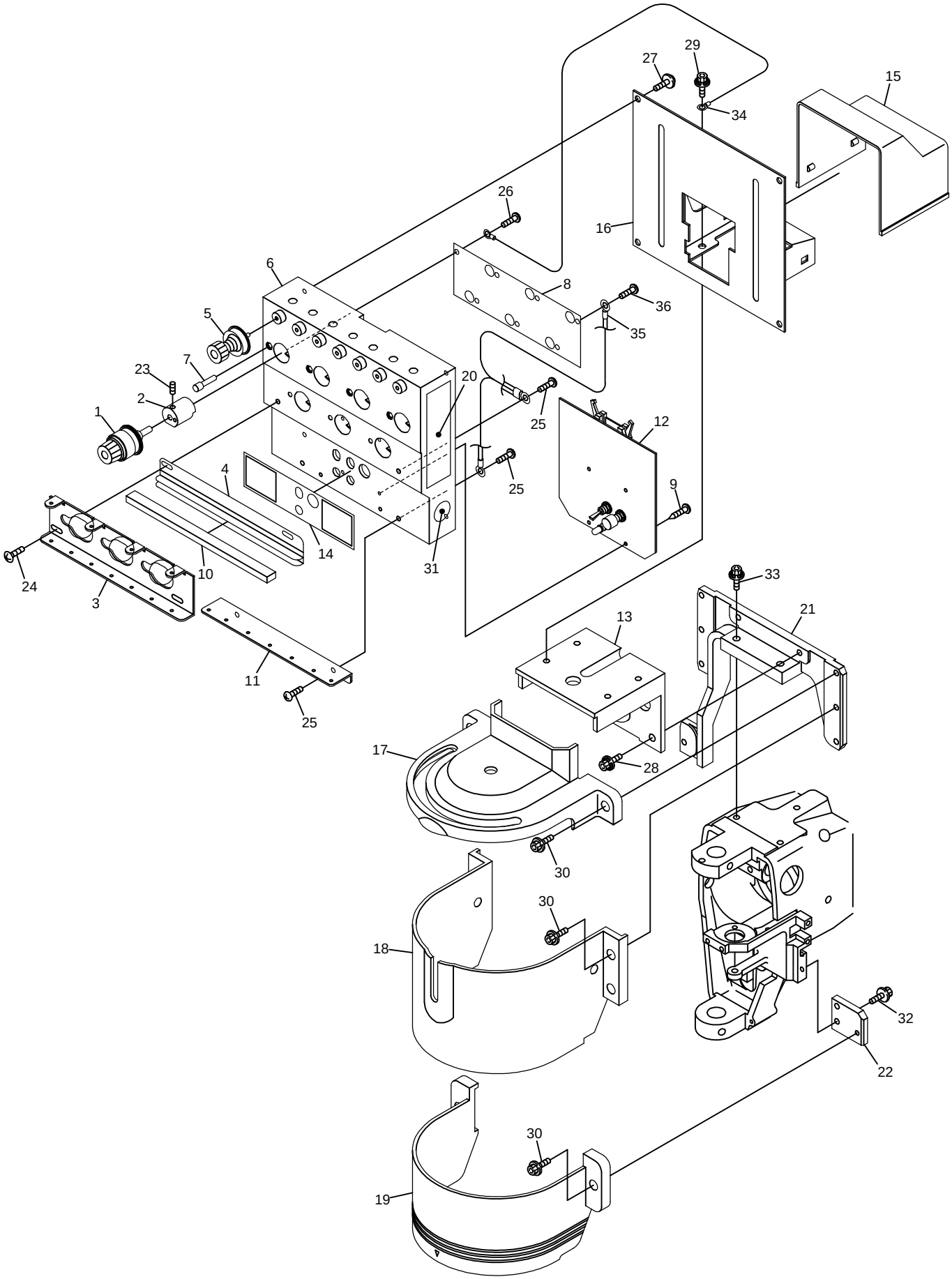

BENS-YS BENS-YS-L BENY-YS BENSME-YS BENYME-YS
BENR-YS BENR-YS-L BENB-YS BENRME-YS BENBME-YS

990907

06A-2 THREAD GUIDE A (STANDARD YS)

ITEM	LIST NO.	DESCRIPTION	Q'TY	NOTE
1	HT240531	Dial tension a'ssy(YS)	H×7	
2	HP241151	Thread tension base	H×7	
3	HP241180	First thread guide(7)	H×1	
4	HP241460	Thread guide felt fixing plate(7)	H×1	
5	HP241440	Thread guide for first tension(D=13.5)		Except for NS/NR-YS-L
	LB240040	Thread guide for first tension(D=13.5)		NS/NR-YS-L
6	HP241123	Tension base case a'ssy(7 needles)	H×1	
7	HP241160	Upper thread detection pin	H×7	
8	HP241381	Tension earth plate(7)	H×1	
9		Tapping screw 2×8		
10	HP241480	Thread guide felt(7)	H×1	
11	HB240261	Second thread guide plate(7)	H×1	
12	EBY01640	4620 Head board for N(YS)	H×1	
13	HB240382	Tension base bracket	H×1	
14	KU241400	Tension base label	H×1	
15	KB240100	Tension cable cover	H×1	
16	KB240060	Tension base(7)	H×1	
17	KB250020	Sewing head cover A	H×1	
18	KB250030	Sewing head cover B	H×1	
19	KB250040	Sewing head cover C	H×1	
20	HB790030	Tension base caution label	H×2	
21	KB250050	Sewing head cover fixing bracket	H×1	
22	KB250060	Sewing head cover fixing stay	H×1	
23		Set screw(SM11/64 40×5.5)		
24		Truss screw M4×6		
25		Pan screw M4×6		
26		Pan screw M3×4		
27		Pan screw M4×8(With plain washer)		
28		Hex.socket bolt M5×15(With washers)	H×2	
29		Hex.socket bolt M5×10(With washers)	H×4	
30		Hex.socket bolt M4×6(With plain washer)		
31	HB240390	Hex.label(tension base)	H×1	
32		Hex.socket bolt M4×15(With washers)		
33		Hex.socket bolt(With washers)		
34	HV240000	Tension earth cable	H×1	
35	A9053080	Tension base earth cable YS	H×1	
36		Pan screw M3×6		

06B-1 Thread guide B (Lower thread sensorium)(YN)

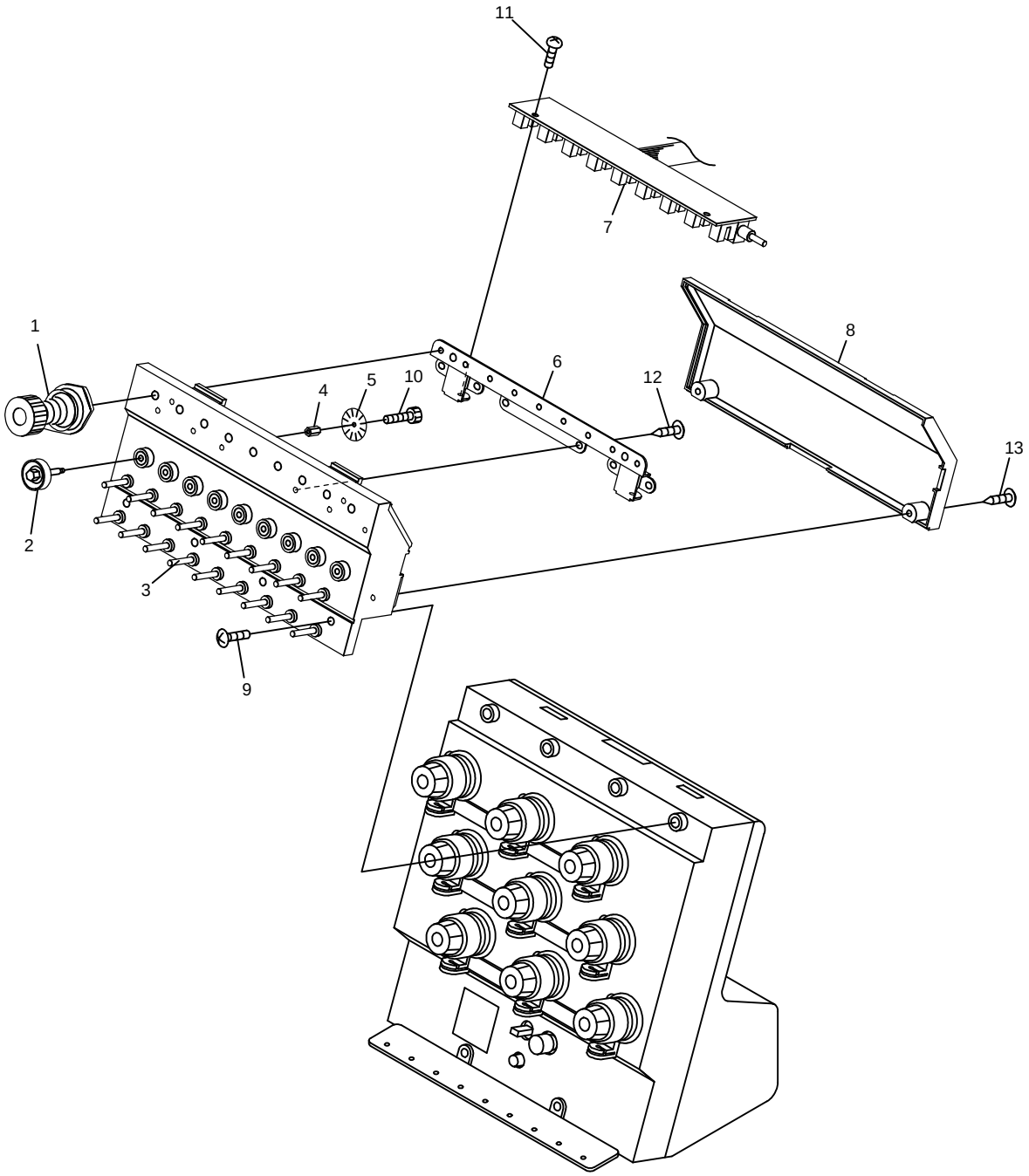

BENS-YN BENS-YN-L BENY-YN
BENR-YN BENR-YN-L BENB-YN

BENSME-ZN BENYME-ZN BENT-ZN BENSH-YN BENSH-YN-S BENSH-YN-B BENSH-YN-BS
BENRME-ZN BENBME-ZN BENRH-YN BENRH-YN-S BENRH-YN-B BENRH-YN-BS

BENYH-YN BENYH-YN-C BENSHE-YN BENYHE-YN BENYHE-YN-B BENYHE-YN-C
BENBH-YN BENRHE-YN BENBHE-YN BENBHE-YN-B BENBHE-YN-C

06B-1 Thread guide B (Lower thread sensorium) (YN) (H=Head Q'TY)

ITEM	LIST NO.	DESCRIPTION	Q'TY	NOTE
1	HT240340	Second guide for upper tension	H×9	Except for NS/NR-YN-L
	LB240080	Second guide for upper tension(With pin)	H×9	NS/NR-YN-L
2	HT240290	Tension wheel	H×9	
3	HT240250	Lower thread detection base a'ssy	H×1	
4	KN540510	Tension wheel nut	H×9	
5	HT240101	Lower thread detection sensor disk	H×9	
6	HT240280	Lower thread detection box base(YN)	H×1	
7	EBY01110	4690 lower thread detection sensor board	H×1	
8	HT240270	Lower thread detection box cover(YN)	H×1	
9		Truss screw M4×10		
10		Hex.socket bolt M2×3		
11		Pan screw M3×6		
12		Tapping pan screw ? f3×8		
13		Tapping pan screw f3×12		

06B-2 Thread guide B (Lower thread sensorium)(YS)

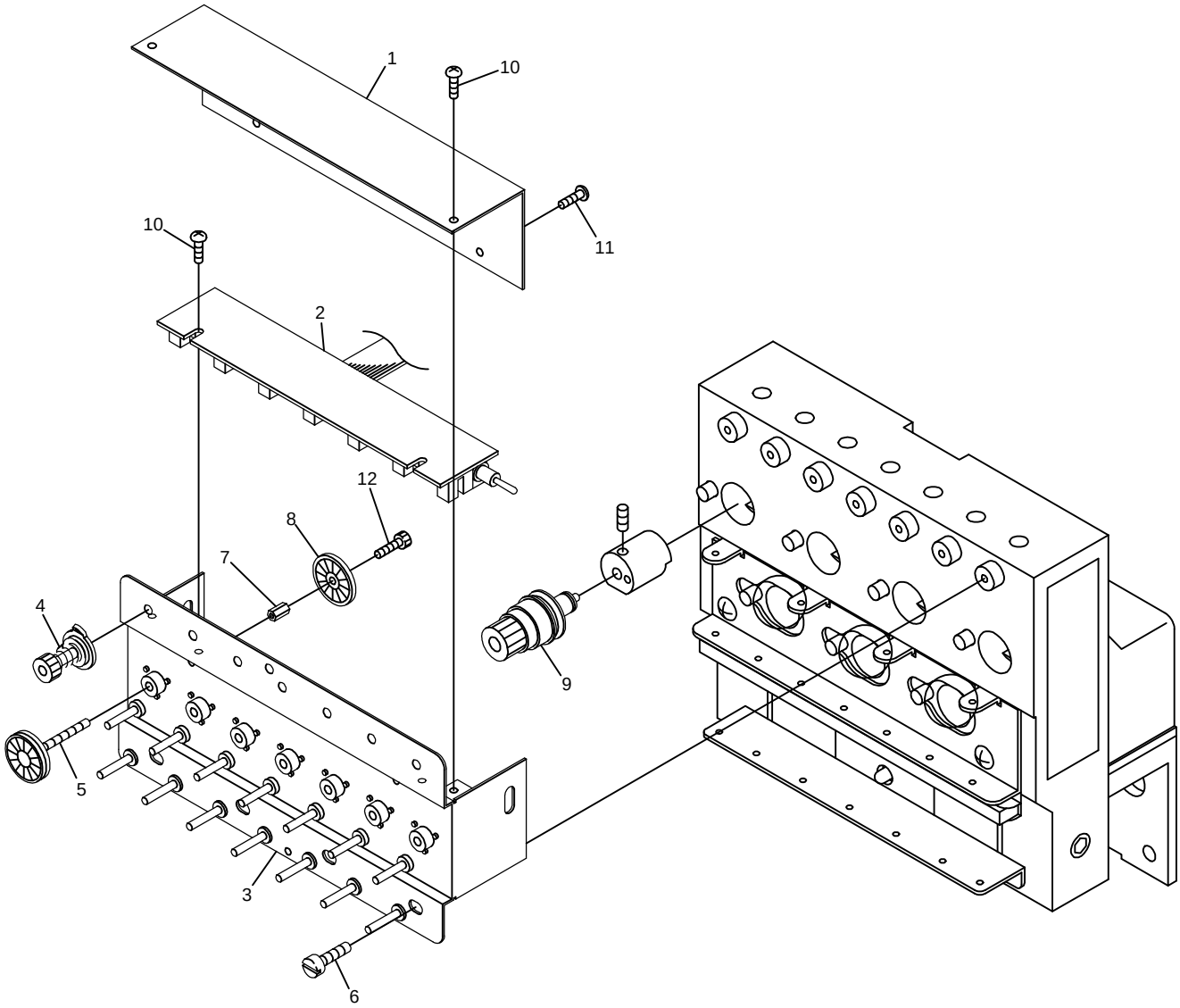

BENS-YS BENS-YS-L
BENR-YS BENR-YS-L

BENY-YS BENSH-YS BENSH-YS-S BENSH-YS-B BENSH-YS-BS BENSHE-YS
BENB-YS BENRH-YS BENRH-YS-S BENRH-YS-B BENRH-YS-BS BENRHE-YS

06B-2 Thread guide B (Lower thread sensorium)(YS) (H=Head Q'TY)

ITEM	LIST NO.	DESCRIPTION	Q'TY	NOTE
1	HB540070	Lower thread detection box cover(7)	H×1	
2	EBY00920	Lower thread detection sensor board(7) 4670 with cable	H×1	
3	HB540050	Lower thread detection box(7)	H×1	
4	HP241430	Thread guide for second tension(D=13.5)	H×7	Except for NS/NR-YS-L
	LB240020	Thread guide for second spool holder (D=13.5)	H×7	NS/NR-YS-L
5	KN540500	Tension wheel shaft a'ssy	H×7	
6	A9012324	Set screw SM11/64×7L(Chrome)		
7	KN540510	Tension wheel nut	H×7	
8	KN540520	Lower thread detection sensor disk	H×7	
9	HT240531	Dial thread tension a'ssy(YS)	H×7	Except for NS/NR-YS-L
	LB240040	Dial thread tension a'ssy	H×7	NS/NR-YS-L
10		Truss screw M3×4		
11		Tapping screw truss head f3×8		
12		Hex.socket bolt M2×3		

07A Color change A

'98.11.06

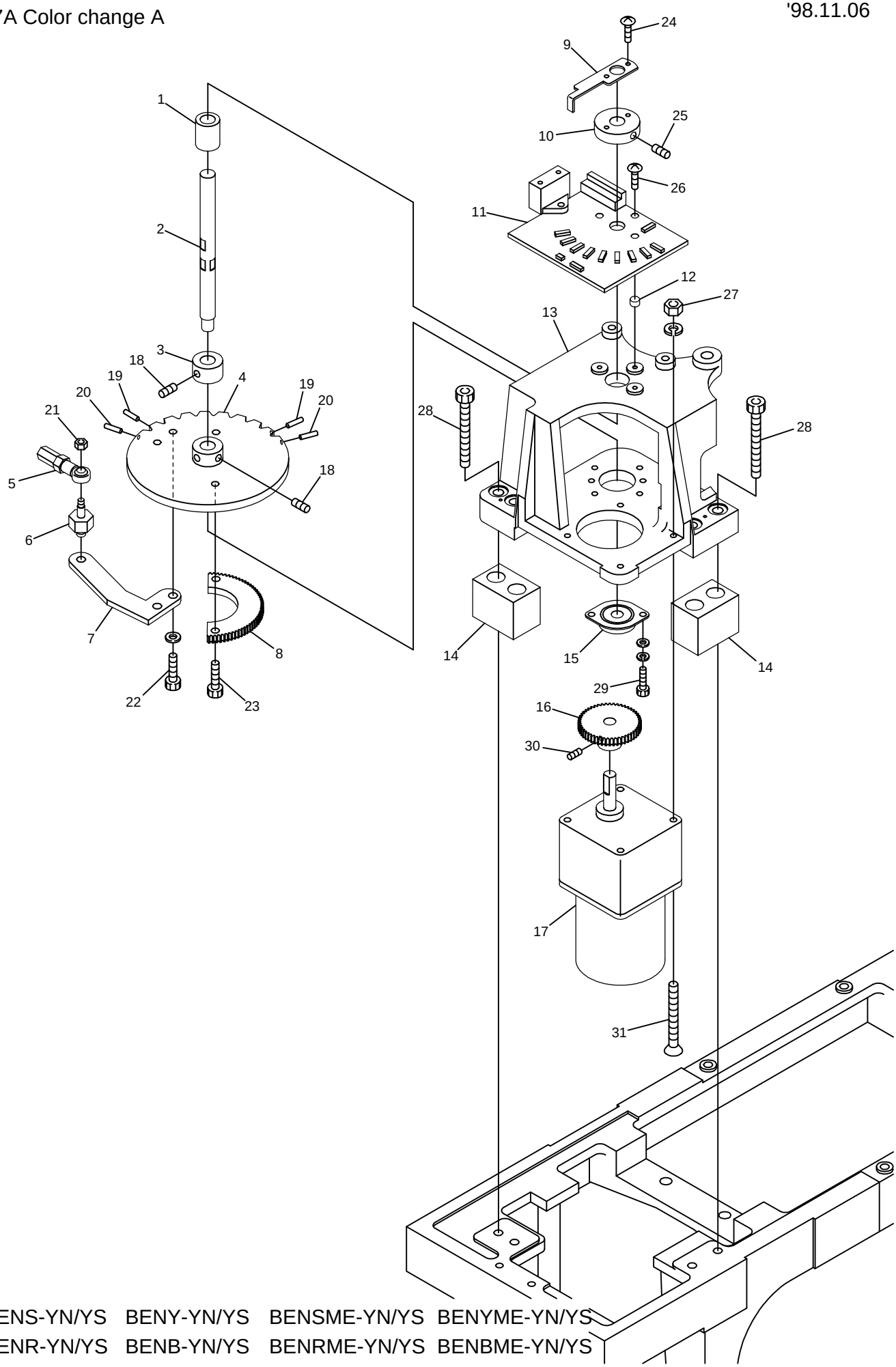

BENS-YN/YS BENY-YN/YS BENSME-YN/YS BENYME-YN/YS
BENR-YN/YS BENB-YN/YS BENRME-YN/YS BENBME-YN/YS

07A Color change A

ITEM	LIST NO.	DESCRIPTION	Q'TY	NOTE
1	KC330190	Oilless metal bush	1	
2	KC330161	Needle turning shaft	1	
3	KC330180	Collar 10 dia.	1	
4	KT330001	Control turning plate(YN multi)	1	
5	A9012001	Uniball joint(RD4020R)	1	
6	KF230360	Rotary plate joint pin	1	
7	KL330040	Rotary plate lever	1	
8	KG330220	Needle turning gear No.2	1	
9	KC330280	Needle bar detection plate	1	
10	KC330170	Detection plate collar	1	
11	EBY01120	3760 needle positioner	1	
12	A9012208	Spacer(Roll bush) 5×4	3	
13	KC330130	Needle turning unit base	1	
14	KL330050	Unit base spacer	2	
15	KC330620	Flange unit SFB34-8C	1	
16	KC330210	Needle turning gear No.1(0.8M50T)	1	
17	A9065035	Gear motor RM-F6A5PC3R163-120	1	
18		Hex.socket set screw M5×6		
19		Spring pin 3×12	2	YS only
20		Spring pin 3×12	2	YN only
21		Hex.nut M5		
22		Hex.socket bolt M5×15		
23		Hex.socket bolt M5×12		
24		Truss screw M3×6		
25		Hex.socket set screw M5×10		
26		Truss screw M3×12		
27		Hex.nut M4		
28		Hex.socket bolt M6×60		
29		Hex.socket bolt M4×12		
30		Hex.socket set screw M4×8		
31		Raised of countersunk screw M4×65		

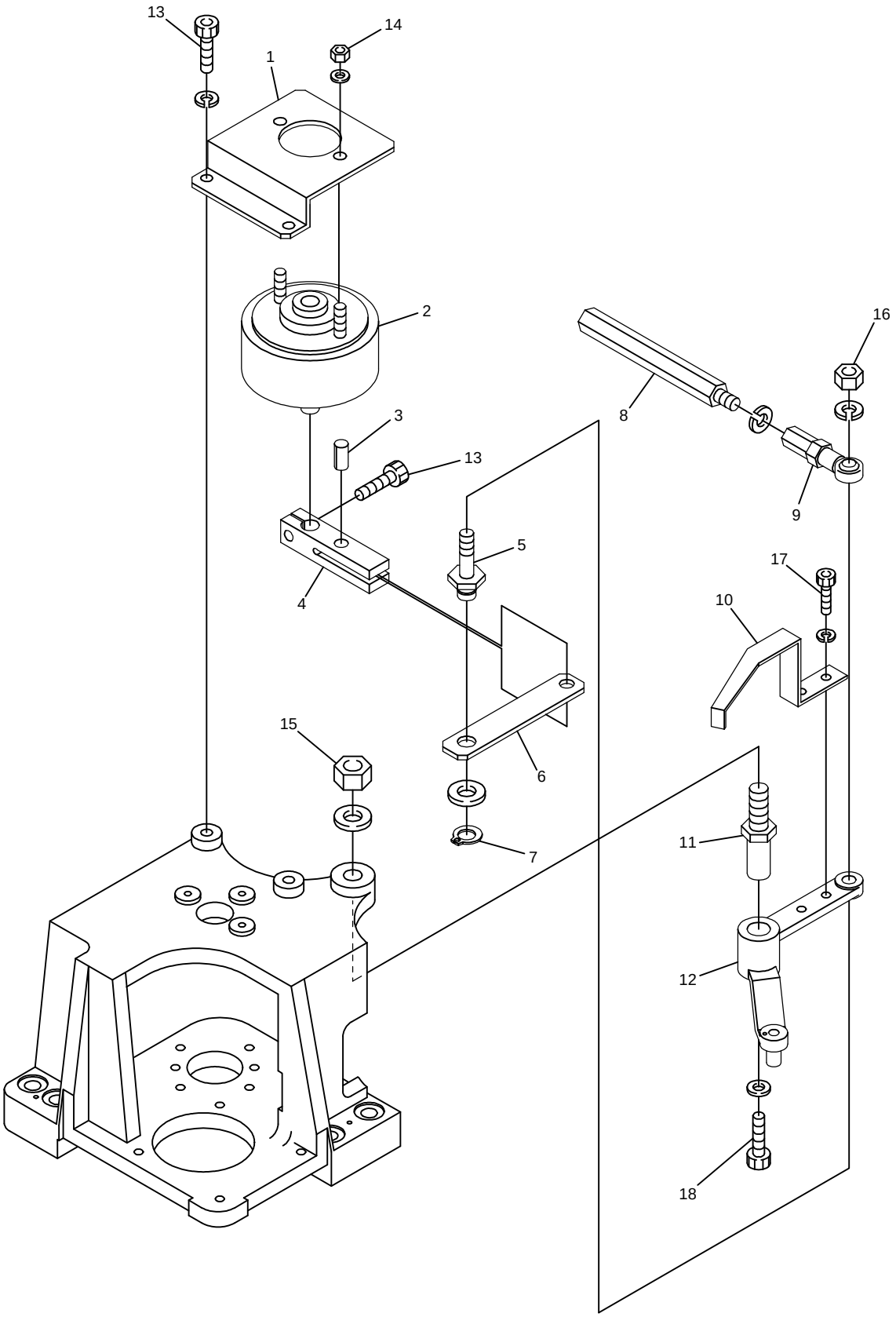

BENS-YN/YS BENS-YN/YS-L BENY-YN/YS BENSME-YN/YS BENYME-YN/YS
BENR-YN/YS BENR-YN/YS-L BENB-YN/YS BENRME-YN/YS BENBME-YN/YS

07B Color change B

ITEM	LIST NO.	DESCRIPTION	Q'TY	NOTE
1	KC330260	Rotary solenoid bracket	1	
2	KC330850	Rotary solenoid 6SR-25(27×4×9) L=15	1	
3	A9012143	Spring pin 6 dia. L=12	1	
4	KN330240	Lock solenoid lever	1	
5	KC330230	Link lock lever pin	1	
6	KN330250	Link lock lever	1	
7	A9012137	Snap ring 8 dia.	1	
8	KC330510	Hex.connecting bar(Large)	1	
9	A9012002	Uniball joint(PR-6)	1	
10	KC330290	Lock detection plate	1	
11	KF230630	Lock lever shaft	1	
12	KG230610	Lock lever	1	
13		Hex.socket bolt M5×12		
14		Hex.nut M4		
15		Hex.nut M8		
16		Hex.nut M6		
17		Hex.socket bolt M4×8		
18		Hex.socket flange bolt M5×4		

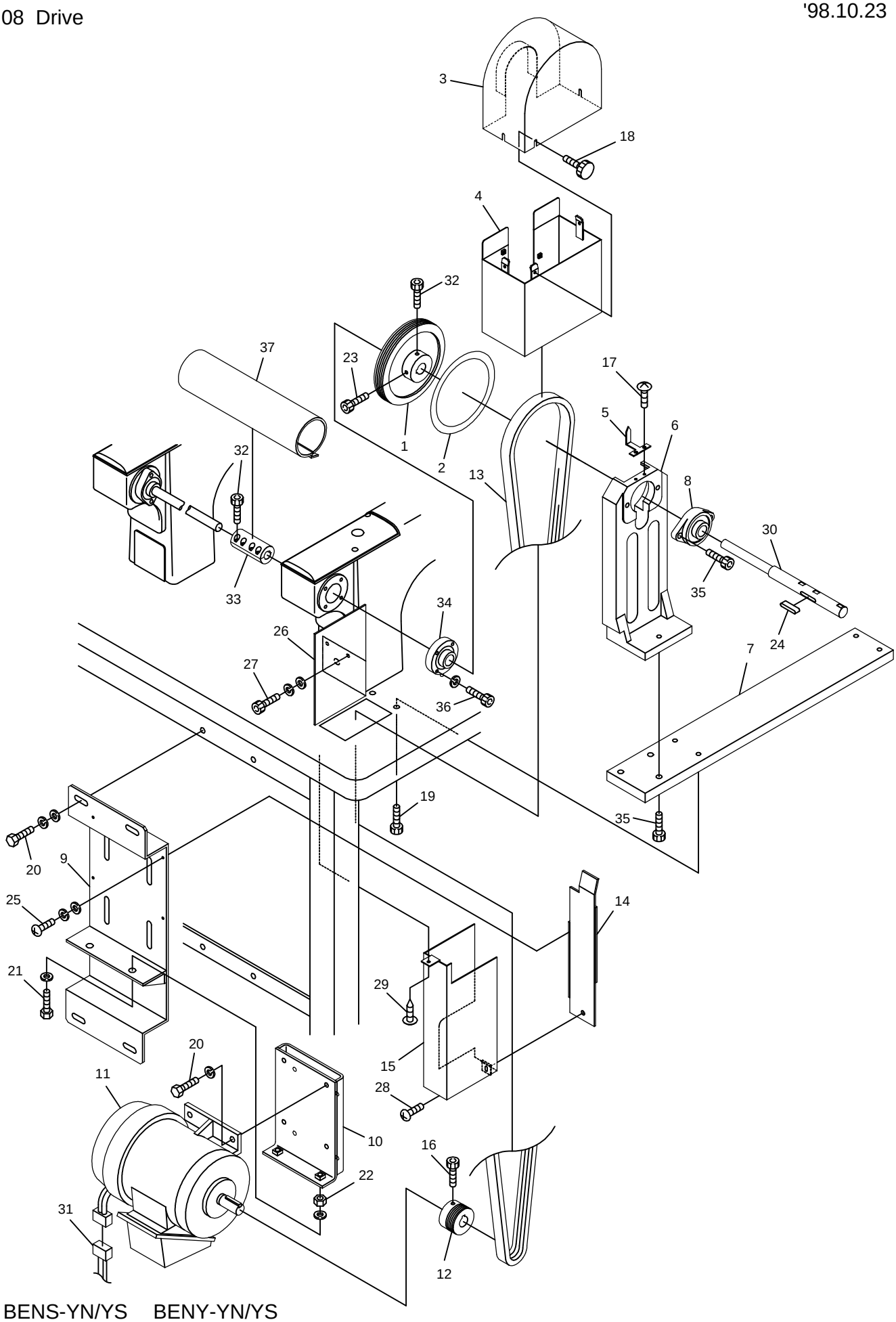

BENS-YN/YS BENY-YN/YS

BENR-YN/YS BENB-YN/YS

08 Drive

ITEM	LIST NO.	DESCRIPTION	Q'TY	NOTE
1	KN310000	Drive pulley 152.2 dia.	1	
2	HP313691	Rotary angle label(B)	1	
3	KV310041	Belt cover(Upper)	1	
4	KV310050	Belt cover(Lower)	1	
5	KV310090	Angle gauge	1	
6	KV310021	Main shaft hold bracket	1	
7	KV310031	Main shaft hold bracket base(Plain bed)	1	
8	A9011017	Bearing unit(BLF 204)	1	
9	KV310070	Motor base(BENS)	1	
10	KV310080	Motor fixing base(BENS)	1	
11	HB310280	Motor FBK8-4P-0.75KW VF3(With cable)	1	
12	KN310010	Motor pulley	1	
13	A9020200	Ribstar belt(4PK-1240)	1	
14	KV310110	Belt cover bracket(BENS)	1	
15	KV310101	Belt cover(BENS)	1	
16		Hex.socket bolt M6×12		
17		Pan screw M4×8		
18	A9012320	Screw	1	
19		Hex.socket bolt M8×20		
20		Hex.bolt M8×15		
21		Hex.bolt M8×55		
22		Hex.nut M8		
23		Hex.socket bolt M5×15		
24	WW310210	Both round parallel key(6×6×35)	1	
25		Pan screw M4×8		
26	KR310041	Belt cover bracket	1	
27		Hex.socket bolt M4×6		
28		Pan screw M4×6		
29		Pierce screw 5×19		
30	HB320070	Upper shaft connecting shaft(15×3300)	1	?
	KC320820	Upper shaft connecting shaft(15×5700)	1	?
31	A9053070	NS motor cable(7.5W)	1	
32		Hex.socket bolt M5×18		
33	HP321100	Lower shaft connecting coupling	1	
34	A9011119	Ball bearing JAF(SH204)	1	
35		Hex.socket bolt M8×25		
36		Hex.socket bolt M5×25		
37	1PKVxxxxx	Shaft cover set	1 Set	Choice and use

09 Connecting shaft

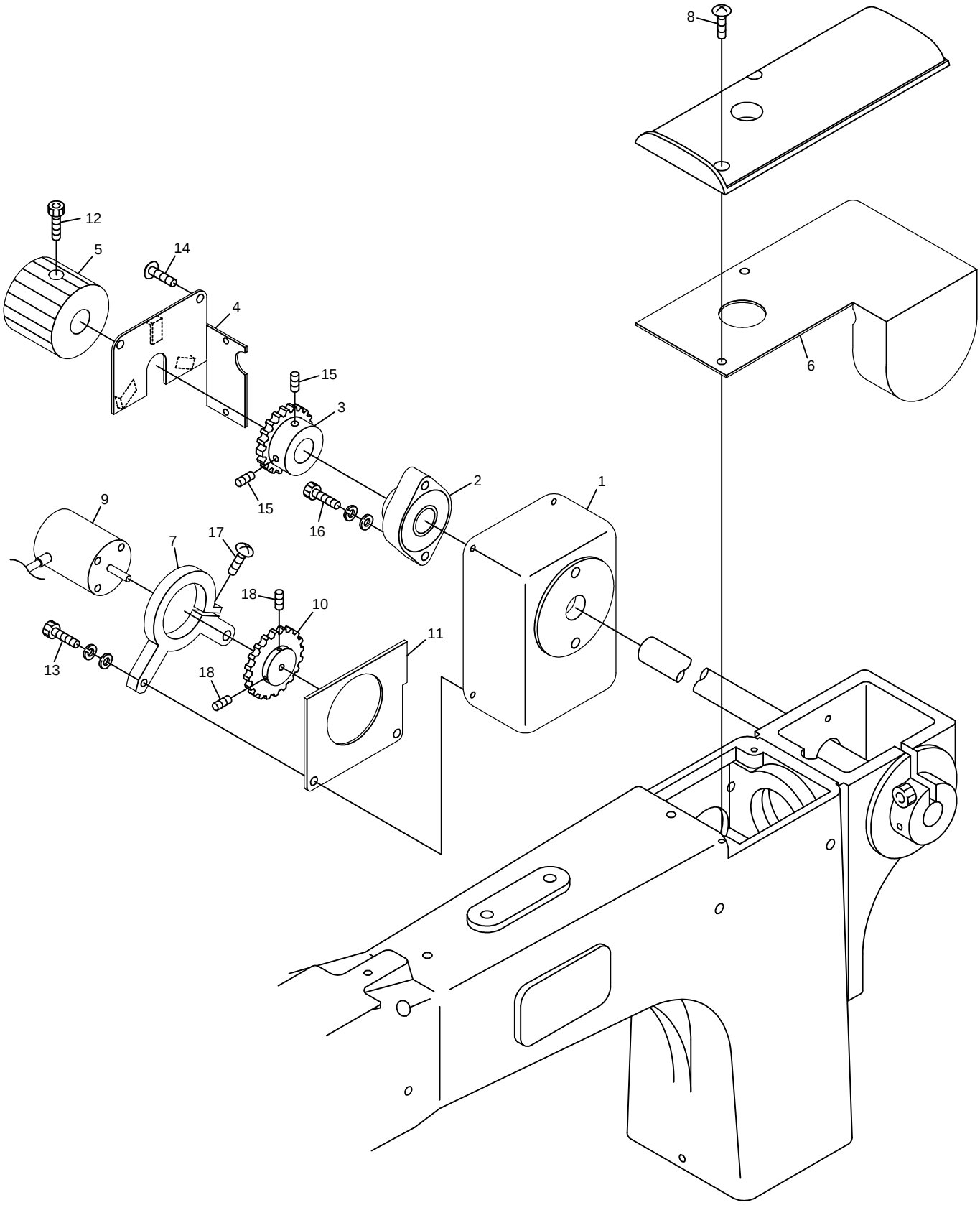

BENS-YN/YS BENS-YN/YS-L BENY-YN/YS BEDSME-ZN/ZQ-A BENYME-ZN/ZQ
BENR-YN/YS BENR-YN/YS-L BENB-YN/YS BENBME-ZN/ZQ

010801

09 Connecting shaft

ITEM	LIST NO.	DESCRIPTION	Q'TY	NOTE
1	KR310090	Encoder box	1	
2	KP321140	Upper shaft connecting bearing unit SBFLN02	1	
3	KR310130	Encoder drive gear No.1	1	
4	KR310120	Encoder box cover A	1	
5	KC320590	Hand pulley	1	
6	KR330110	Shaft sand cover	1	
7	KC312890	Encoder holder	1	
8		Truss screw M4×10		
9	KN511020	Position coder TS5307N54	1	
10	KR310100	Encoder drive gear No.2	1	
11	KR310110	Encoder box cover B	1	
12		Hex.socket bolt M6×12		
13		Hex.socket bolt M6×20		
14		Truss screw M4×6		
15		Hex.socket set screw M5×10		
16		Hex.socket bolt M6×40		
17		Truss screw M4×15		
18		Hex.socket set screw M4×10		

10A Pantograph drive A

'98.11.25

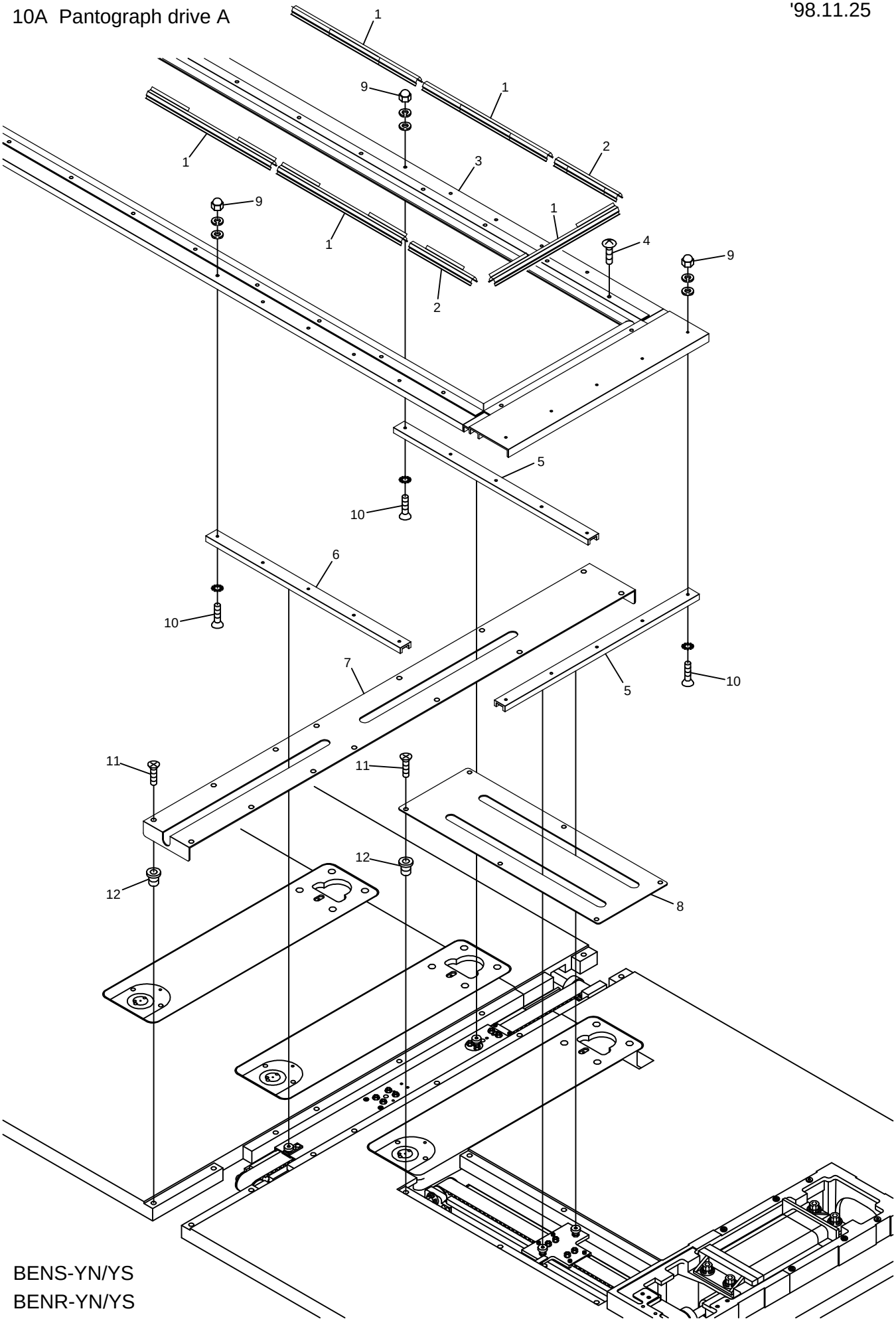

BENS-YN/YS
BENR-YN/YS

10A PANTOGRAPH DRIVE A

ITEM	LIST NO.	DESCRIPTION	Q'TY	NOTE
1	KF730750	Clip(300L)	26	
2	KF730760	Clip(150L)	2	
3	KC450020	Pantograph frame a'ssy(BEHJ-12 320×300)	1	
4	KF730500	Truss screw SM11/64×10.5		
5	KN480350470	Guide rail A(470L)	4	
6	KN480420470	Guide rail B(470L)	4	
7	KV480020	H-center guide cover	4	
8	KV480040	V-guide cover(Stroke 350)	1	
9		Cap nut M4		
10		Flush screw M4×12		
		(With toothed lock washer)		
11		Flush screw M4×8(Under cut)		
12		Rag nut(C) M4		

10B Pantograph drive B

'98.11.02

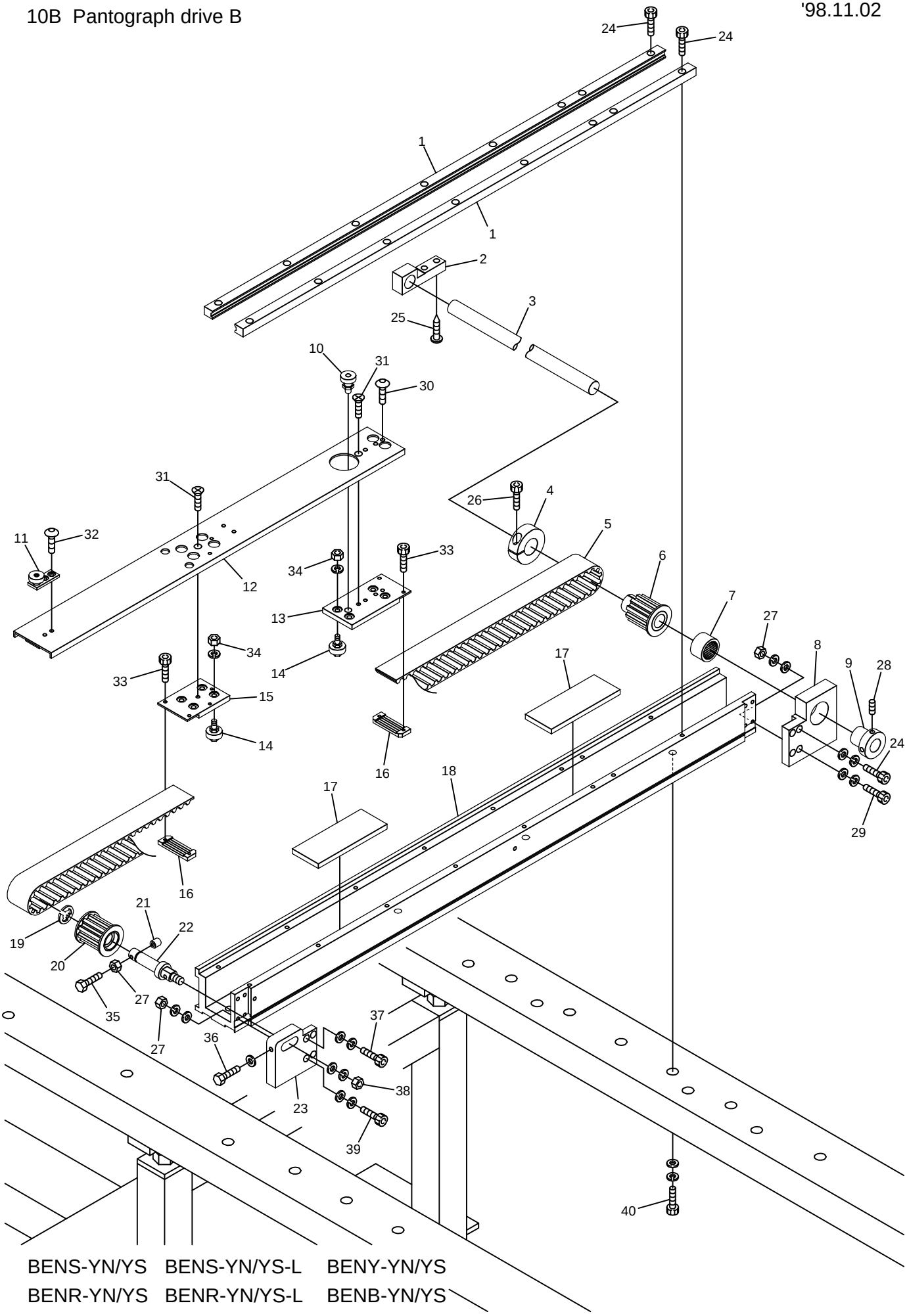

BENS-YN/YS BENS-YN/YS-L BENY-YN/YS
BENR-YN/YS BENR-YN/YS-L BENB-YN/YS

10B PANTOGRAPH DRIVE B

R = V DIRECTION RAIL QTY.

ITEM	LIST NO.	DESCRIPTION	Q'TY	NOTE
1	KN483450	V-guide rail(L=660)	R×2	
2	HV480070	Pulse motor connecting shaft support	2	
3		H-pulse motor connecting shaft f15	2	
4	HH481980	19 dia. clamping	R×1	
5	HV480110	Free span belt(300S5M)	R×1	
6	HV480040	Pantograph driving pulley(Rear)	R×1	
7	A9011063	Needle bearing(TLA2016)	R×1	
8	KR480050	H/V-guide pulley bracket(Rear)	R×1	
9	HH481970	Pulse motor connecting shaft collar	R×1	
10	HP483370	Guide rail bearing pin a'ssy	R×1	
11	HP483391	Guide rail bearing pin a'ssy(H)	R×1	
12	KN483442	H-member connectig channel	R-1	
	KN483460	H-member connectig channel	1	For pantograph stop
13	KN482871	H-roller base(Rear)	R×1	
14	HP482950	Roller pin a'ssy A	R×8	
15	KN482880	H-roller base(Front)	R×1	
16	HP482940	Timing belt set rack(5M)	R×2	
17	KN480061	Raile base felt(100×38×6)	R×2	
18	KV480010	H-guide rail base(BENS)	R×1	
19	A9012052	E-ring(f10)	R×1	
20	HV480050	Pantograph driving pulley(Front)	R×1	
21	HH482110	Pulley shaft bolt cap	R×1	
22	HH481991	Timing pulley shaft	R×1	
23	KR480060	H/V-guide pulley bracket(Front)	R×1	
24		Hex.socket bolt M4×15		
25		Pierce screw 5×23		
26		Hex.socket bolt M5×18		
27		Hex.nut M4		
28		Hex.socket set screw M5×8		
29		Hex.socket bolt M4×20		
30		Hex.socket button bolt M4×8		
31		Flush screw M4×8(Undercut)		
32		Hex.socket button bolt M4×5		
33		Hex.socket bolt M3×6		
34		Hex.nut M5		
35		Hex.bolt M4×35		
36		Hex.bolt M4×25		
37		Hex.socket bolt M4×18		
38		Hex.nut M8		
39		Hex.socket bolt M4×22		
40		Hex.socket bolt M8×22(With washers)		

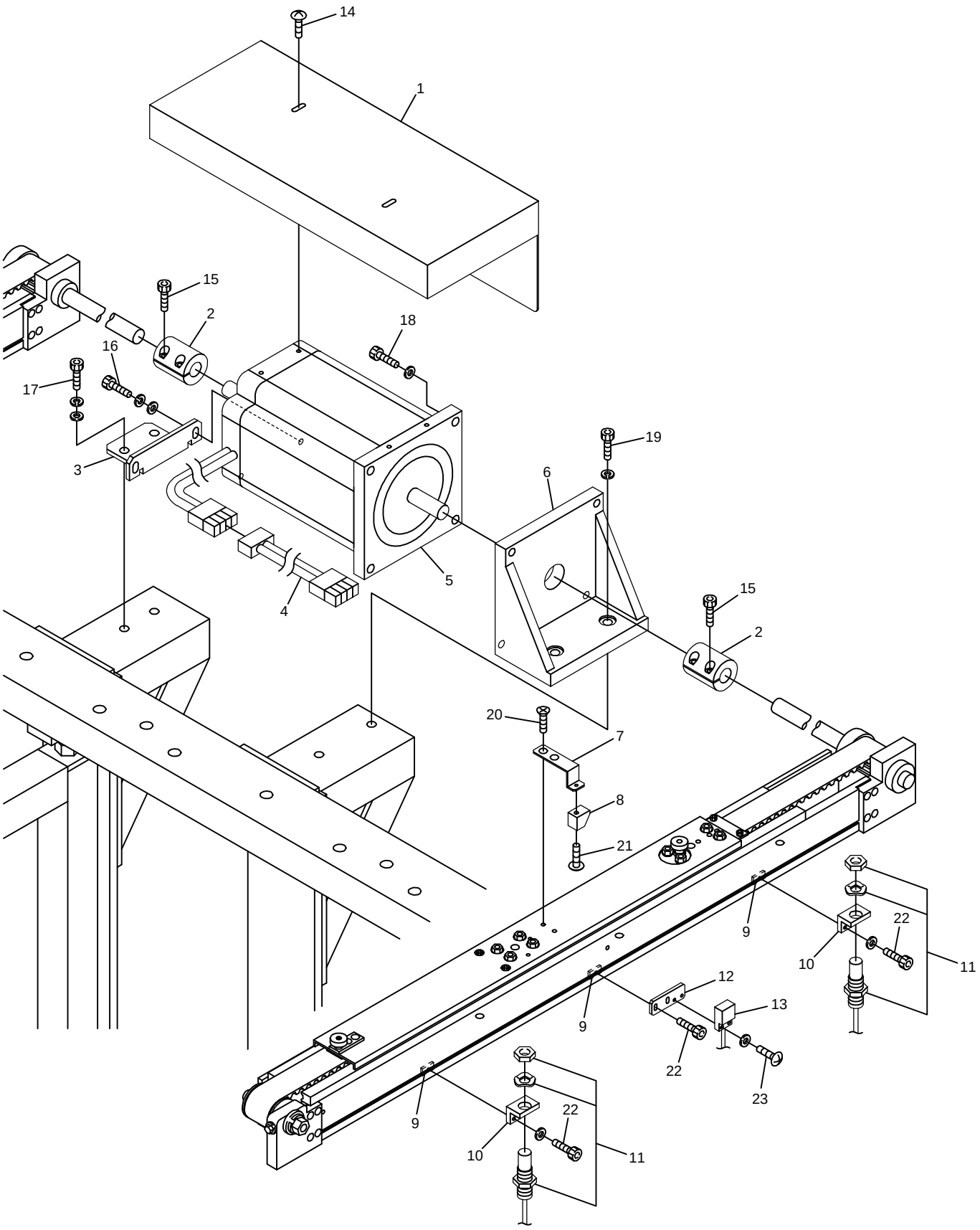

BENS-YN/YS BENS-YN/YS-L

BENR-YN/YS BENR-YN/YS-L

10C PANTOGRAPH DRIVE C

ITEM	LIST NO.	DESCRIPTION	Q'TY	NOTE
1	LB480060	H-pulse motor cover	1	
2	HH481931	Pulse motor coupling	2	
3	HV480020	H-pulse motor support bracket	1	
4	HV510020	H-pulse motor extension cable(L=1500)	1	
5	HV480060	Pulse motor(5M)	1	
6	HV480010	H-pulse motor bracket	1	
7	KU460342	H-pantograph origin point magnet bracket	1	
8	A9052030	Magnet(M-102A-02)	1	
9	KU460271	Plate nut(M3)	3	
10	MT460240	RS-001 bracket(V-side)	2	
11	A9052079	Proximity switch RS-001 NO-16 L700	2	
12	KN450301	Proximity switch fixing bracket	1	
13	A9052084	Origin point sensor SW-3795	1	
14		Truss screw M4×8		
15		Hex.socket bolt M5×18		
16		Hex.socket bolt M6×25(With washers)		
17		Hex.socket bolt M8×25(With washers)		
18		Hex.socket bolt M8×30(With plain washer)		
19		Hex.socket bolt M8×30(With spring washer)		
20		Flush screw M4×8(Undercut)		
21		Truss screw M3×6		
22		Hex.socket bolt M3×8		
23		Truss screw M3×10		

10D Pantograph drive D

'98.11.25

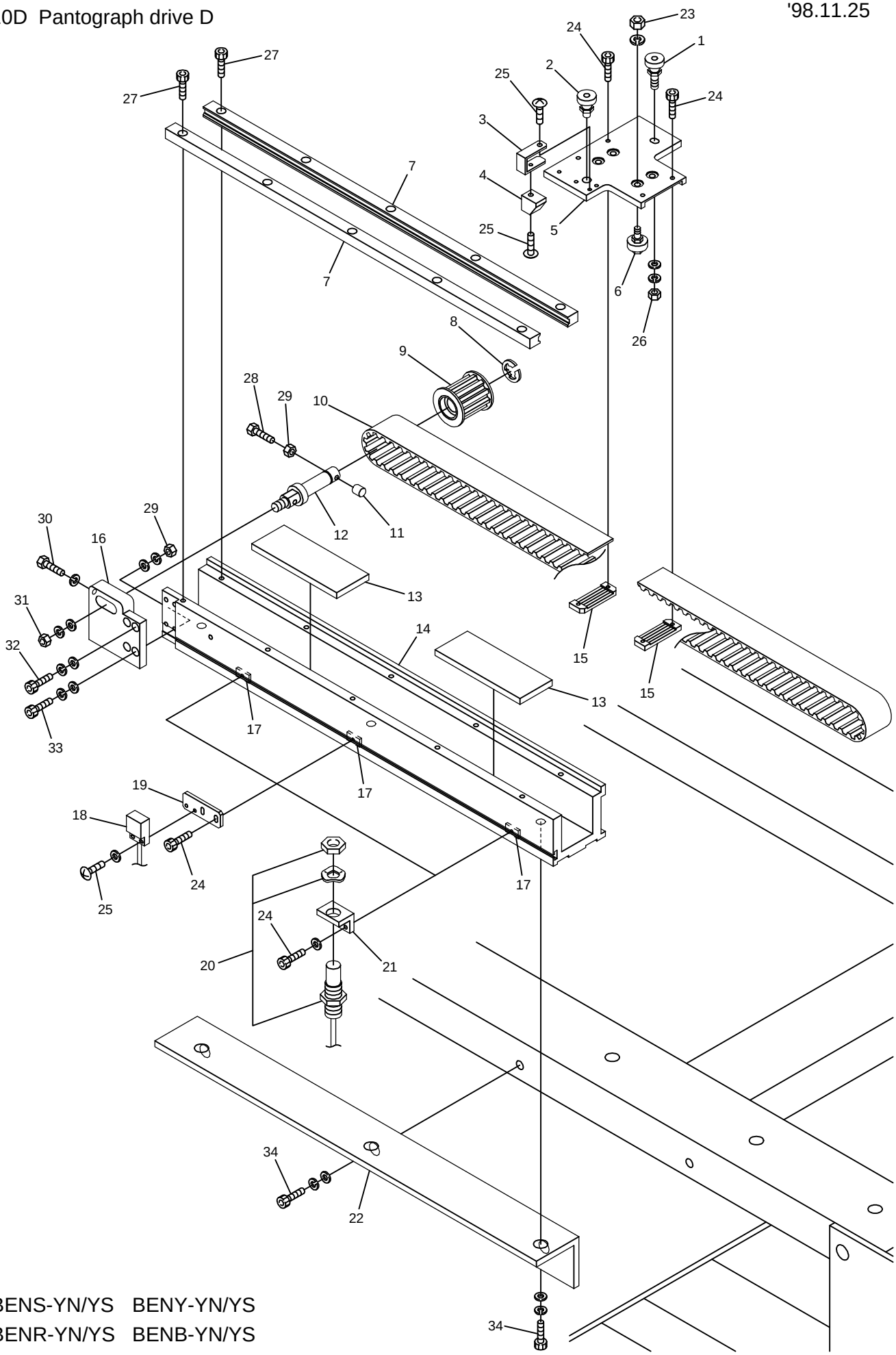

BENS-YN/YS BENY-YN/YS
BENR-YN/YS BENB-YN/YS

10D PANTOGRAPH DRIVE D

ITEM	LIST NO.	DESCRIPTION	Q'TY	NOTE
1	HP483111	Guide rail bearing pin a'ssy B	1	
2	HP483370	Guide rail bearing pin a'ssy	1	
3	KN450311	V-pantograoh origin point magnet bracket	1	
4	A9052030	Magnet(M-102A-02)	1	
5	KN482890	V-roller base	1	
6	HP482950	Roller pin a'ssy A	4	
7	KK480140	V-guide rail H-side(L=430)	2	
8	A9012052	E-ring (10 dia)	1	
9	HV480040	Pantograph drive pulley(Rear)(S5M)	1	
10	A9020098	Timing belt(300S5M2000)	1	
11	HH482110	Pulley shaft bolt cap	1	
12	HH481991	Timing pulley shaft	1	
13	KN480061	Rail base felt(SR100×38×6)	2	
14	KV480030	V-guide rail base(Stroke 350)	1	
15	HP482940	Timing belt hold rack(5M)	2	
16	KR480060	H.V-guide pulley bracket	1	
17	KU460271	Plate nut(M3)	3	
18	A9052084	Origin point sensor SW-3795	1	
19	KN450301	Proximity switch fixing bracket	1	
20	A9052079	Proximity switch RS-001 NO-16 L700	2	
21	MT460240	RS-001 bracket(V-side)	2	
22	KC470460	V-guide rail base bracket	1	V-stroke 350,480
	KN482620	V-guide rail base bracket(V-stroke 600)	1	V-stroke 600
23		Hex.nut M5		
24		Hex.socket bolt M3×6		
25		Truss screw M3×6		
26		Hex.nut M6		
27		Hex.socket bolt M4×15		
28		Hex.bolt M4×35		
29		Hex.nut M4		
30		Hex.bolt M4×25		
31		Hex.nut M8		
32		Hex.socket bolt M4×18		
33		Hex.socket bolt M4×22		
34		Hex.socket bolt M8×20		

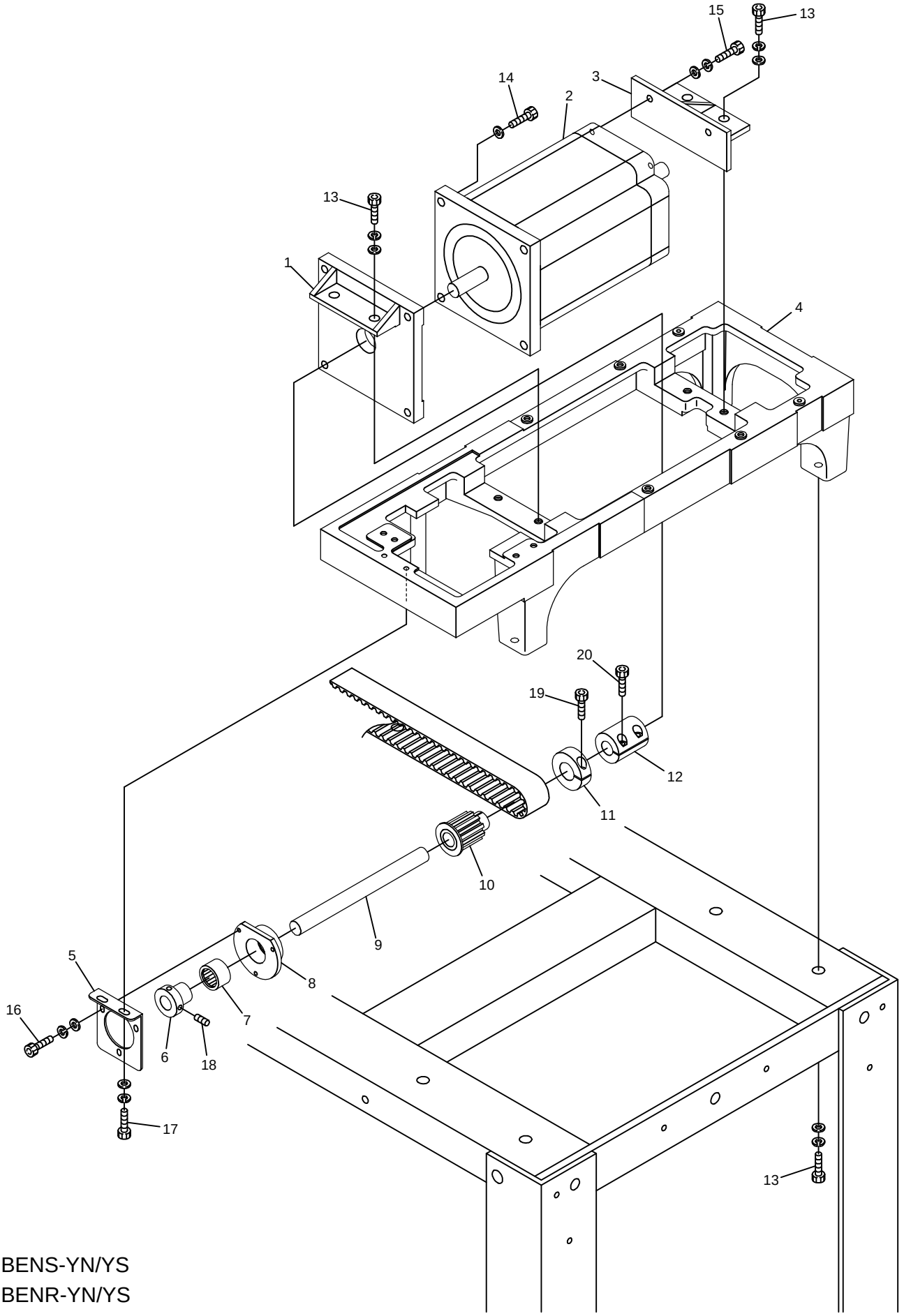

BENS-YN/YS
BENR-YN/YS

10E PANTOGRAPH DRIVE E

ITEM	LIST NO.	DESCRIPTION	Q'TY	NOTE
1	KV470010	Pulse motor bracket A	1	
2	HV480060	Pulse motor(5M)	1	
3	KV470020	Pulse motor bracket B	1	
4	KV330030	control unit base	1	
5	KN490121	Bearing bracket	1	
6	HH481970	Pulse motor connecting shaft collar	1	
7	A9011110	Needle bearing(HK2016)	1	
8	KN490130	V-timing belt shaft bearing housing	1	
9	KV470031	V-pulse motor connecting shaft	1	
10	HV480040	Pantograph drive pulley(Rear)	1	
11	HH481980	Clamping 19 dia.	1	
12	HH481931	Pulse motor coupling	1	
13		Hex.socket bolt M8×25		
14		Hex.socket bolt M8×30(With plain washer)		
15		Hex.socket bolt M6×25(With washers)		
16		Hex.socket bolt M4×10		
17		Hex.socket bolt M5×12		
18		Hex.socket set screw M5×8		
19		Hex.socket bolt M5×18		
20		Hex.socket bolt M5×28		

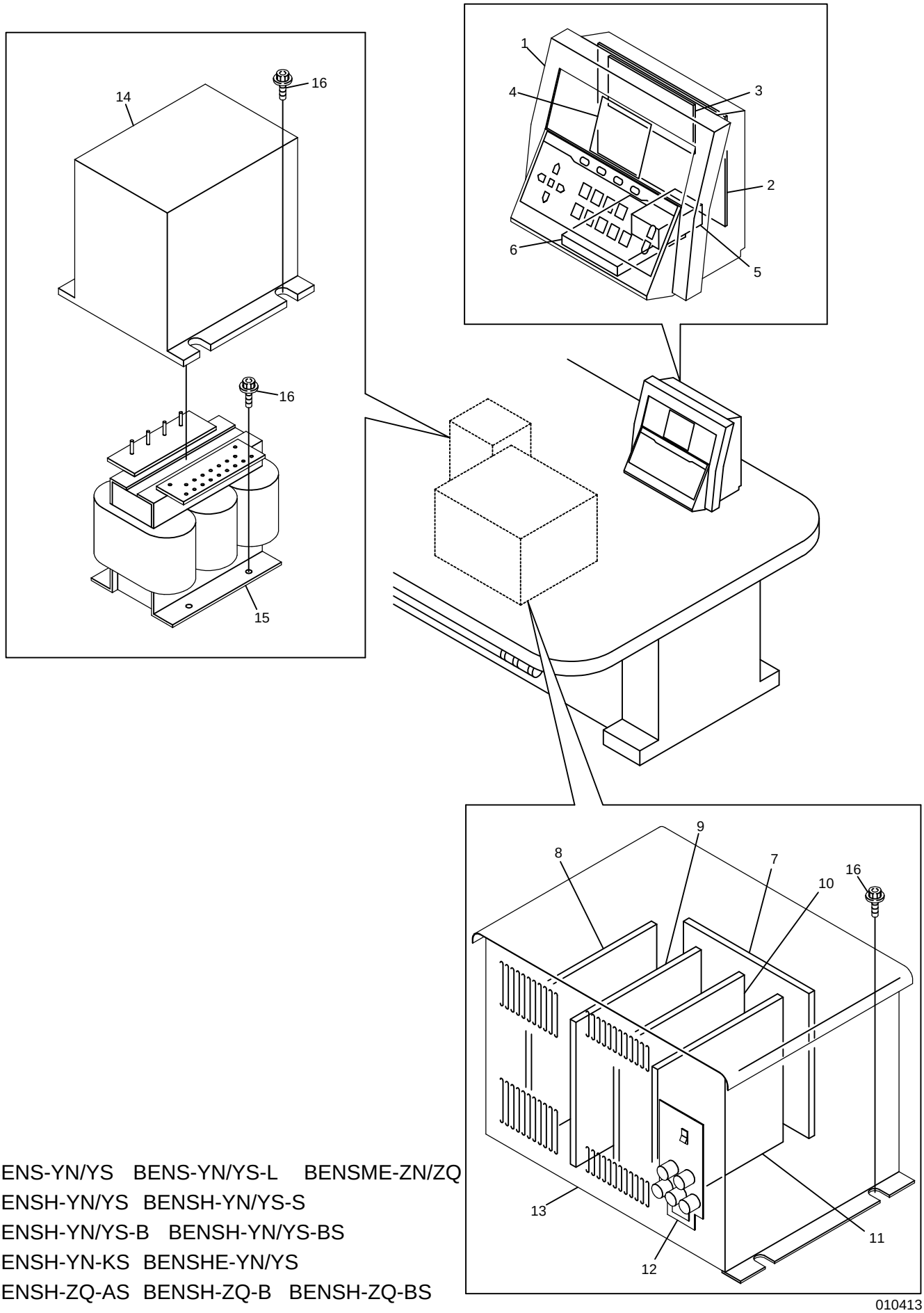

BENS-YN/YS BENS-YN/YS-L BENSME-ZN/ZQ
BENSH-YN/YS BENSH-YN/YS-S
BENSH-YN/YS-B BENSH-YN/YS-BS
BENSH-YN-KS BENSHE-YN/YS
BENSH-ZQ-AS BENSH-ZQ-B BENSH-ZQ-BS

11A-1 CONTROL A (NS)

ITEM	LIST NO.	DESCRIPTION	Q'TY	NOTE
1	EAY033A1	NS automat controller	1	
2	EBY02220	5613A N CPU board	1	
3	EBY01240	5430 N memory board	1	
4	EBY02200	LCD indication vessel	1	
5	EBY01270	Automat power	1	
6	EBY01350	Floppy disk drive	1	
7	EBY01330	5740 back board	1	Pulse type
	EBY01800	Back board(AC servo) 5790	1	Servo type
8	EBY01311	5711 pulse motor drive unit	1	Pulse type
	EBY01810	AC servo unit 5780	1	Servo type
9	EBY01341	Inverter unit(NS750W)	1	
10	EBY01301	CPU board(5711)	1	
11	EBY01320	5730 power board	1	Pulse type
	EBY01820	Power board(UAD-XI) 5731	1	Servo type
12	EBY01290	N driver power control unit	1	Pulse type
	EBY01830	Power control unit 5731AC	1	Servo type
13	EAY040A2	NS automat driver ETL	1	Pulse type
	EAY062A2	DS servo driver UAD-XIIA(NS coller)	1	Servo type
14	KC520020	Transformer cover set	1	
15	EAY040A3	Transformer 3P(ETL)	1	Pulse type
	EAY044A2	Automat transformer 3P(T1479)	1	Servo type
	EAY041A3	NS transformer 1P(ETL)	1	Pulse type
	EAY042A3	Automat transformer 1P	1	Servo type
16		Hex.socket flange bolt M6×15		

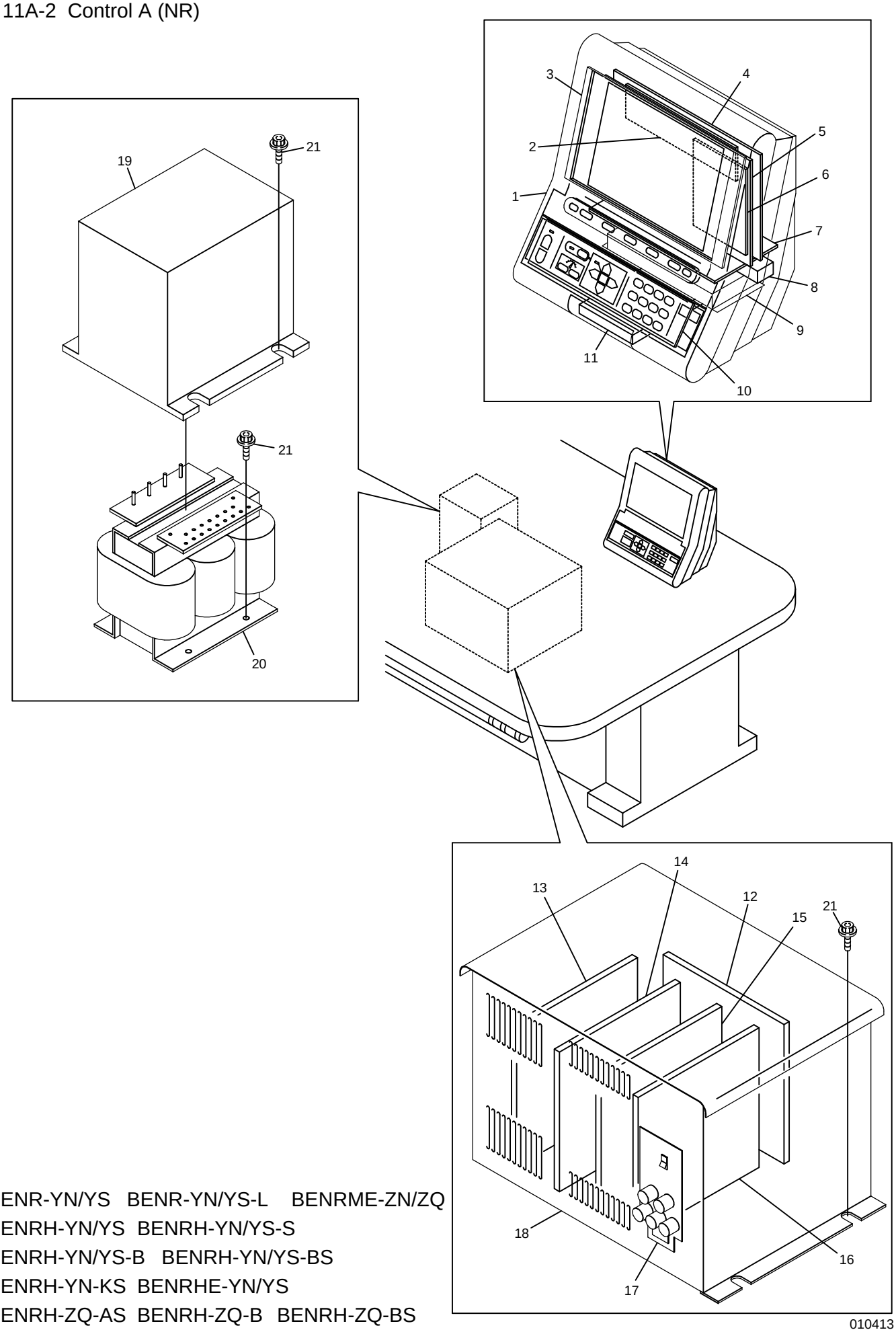

BENR-YN/YS BENR-YN/YS-L BENRME-ZN/ZQ
BENRH-YN/YS BENRH-YN/YS-S
BENRH-YN/YS-B BENRH-YN/YS-BS
BENRH-YN-KS BENRHE-YN/YS
BENRH-ZQ-AS BENRH-ZQ-B BENRH-ZQ-BS

010413

11A-2 CONTROL A (NR)

ITEM	LIST NO.	DESCRIPTION	Q'TY	NOTE
1	EAY038A1	NR automat controller	1	
2	EBY01550	5480	1	
		690 thousand needle memory board BENR		
3	EBY01601	LCD NL6448AC33-18 BENR	1	
4	EBY01541	5422 I/O board BENR	1	
5	EBY01530	5411 CPU board BENR	1	
6	EBY01580	5470 back light board BENR	1	
7	EBY01560	5452 B/B board BENR	1	
8	EBY01380	Inlet GL-2030HI	1	
9	EBY01590	Switching power supply MRW160 BENR	1	
10	EBY01570	5460 switch relay board BENR	1	
11	EBY01352	Floppy disk drive FD-05HG-261	1	
12	EBY01330	5740 back board	1	Pulse type
	EBY01800	Back board(AC servo) 5790	1	Servo type
13	EBY01311	5711 pulse motor drive unit	1	Pulse type
	EBY01810	AC servo unit 5780	1	Servo type
14	EBY01341	Inverter unit(NS750W)	1	
15	EBY01301	CPU board(5711)	1	
16	EBY01320	5730 power board	1	Pulse type
	EBY01820	Power board(UAD-XI) 5731	1	Servo type
17	EBY01290	N driver power control unit	1	Pulse type
	EBY01830	Power control unit 5731AC	1	Servo type
18	EAY040A2	NS automat driver ETL	1	Pulse type
	EAY062A2	DS servo driver UAD-XIIA(NS coller)	1	Servo type
19	KC520020	Transformer cover set	1	
20	EAY040A3	Transformer 3P(ETL)	1	Pulse type
	EAY044A2	Automat transformer 3P(T1479)	1	Servo type
	EAY041A3	NS transformer 1P(ETL)	1	Pulse type
	EAY042A3	Automat transformer 1P	1	Servo type
21		Hex.socket flange bolt M6×15		

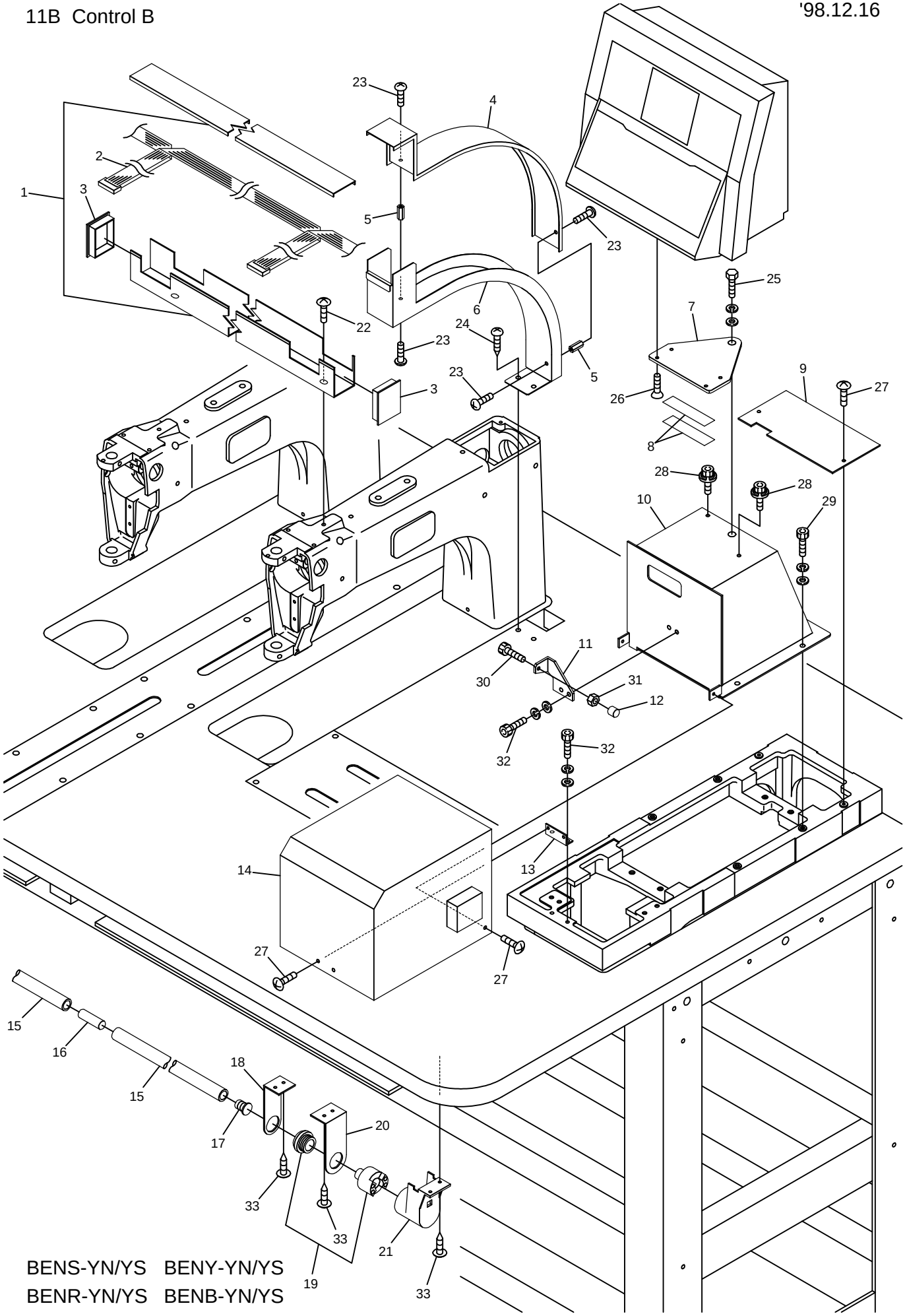

BENS-YN/YS BENY-YN/YS
BENR-YN/YS BENB-YN/YS

11B CONTROL B

ITEM	LIST NO.	DESCRIPTION	Q'TY	NOTE
1	1UKV15320	Duct cable(BENS)	1	
2	2DKV15320	Flat cable NS-15P320	1	
3	KV510181	Cable duct cap	2	
4	KR510130	Cable duct No.4 cover	1	
5	MT510791	Nut for cable duct	2	
6	KR510120	Cable duct No.4	1	
7	HV330011	Automat bracket	1	NS/NY
	HV330040	NR automat bracket	1	NR/NB
8	HV330022	Automat bracket spacer	2	
9	KV330040	Unit base cover	1	
10	KV330010	Automat base	1	
11	KL330020	Lock lever stopper	1	
12	KN231350	Needle bar cap	1	
13	KC330910	Conning tower cover bracket	1	
14	KV330020	Turning cover a'ssy	1	
15	KF530160	Switch bar	2	
16	KF530250	Switch bar joint	1	
17	KF530171	Switch bar cap	2	
18	KC530240	Bar switch bracket(Small)	9	
19	KF530120	Push button switch MS319(Green)	1	Left side
	KF530111	Push button switch MS319(Red)	1	Right side
20	KC530230	Bar switch bracket(Large)	2	
21	KF530150	Push button switch cap	2	
22		Truss screw M5×8		
23		Pan screw M4×6		
24		Tapping screw 4×15		
25		Hex.bolt M10×25(With washers)		
26		Flush screw M4×10		
27		Truss screw M4×6		
28		Hex.socket flange bolt M6×20		
29		Hex.socket bolt M6×10(With washers)		
30		Hex.socket bolt M5×30		
31		Hex.nut M5		
32		Hex.socket bolt M5×10(With washers)		
33		Tapping pan screw 4×20		

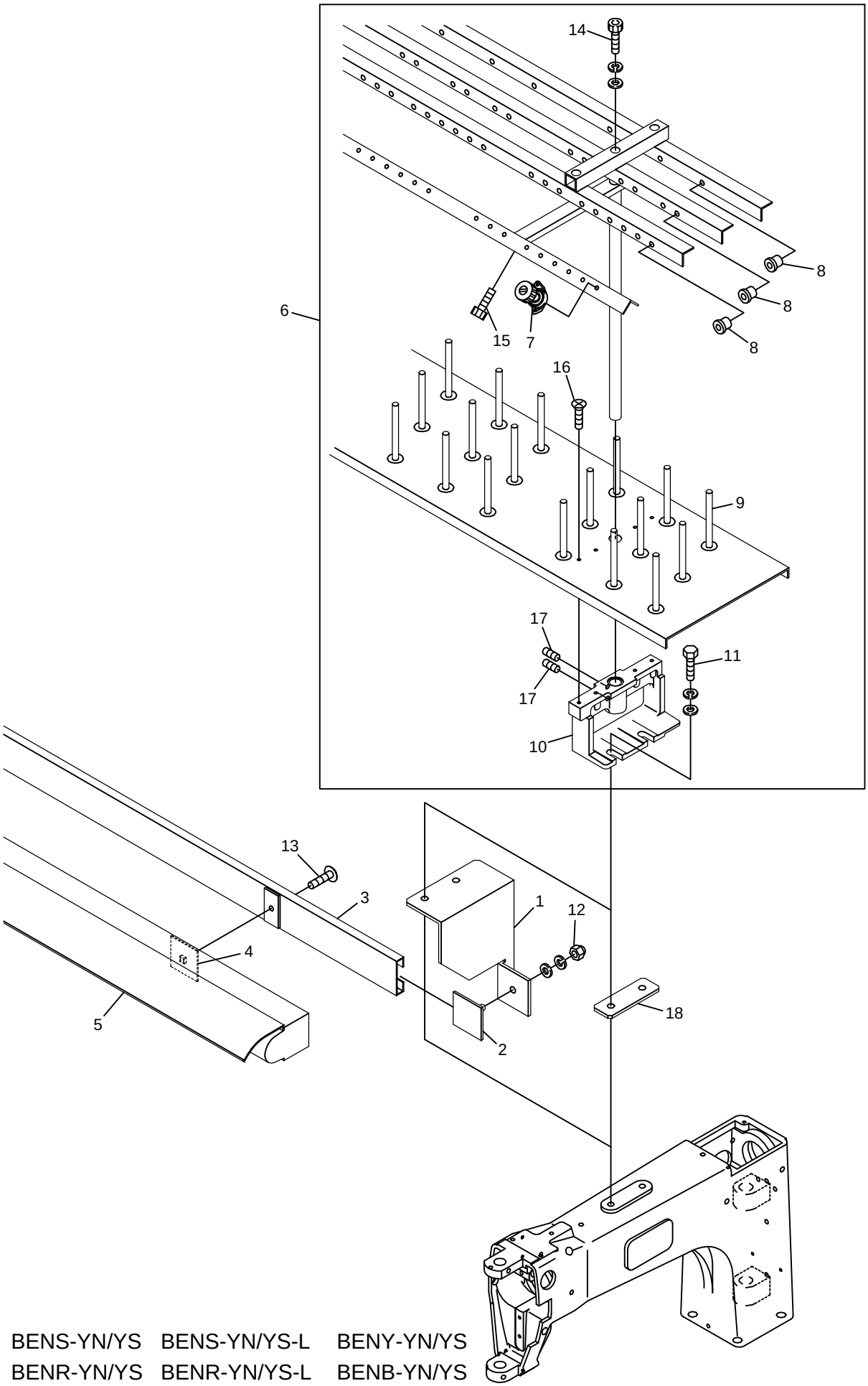

BENS-YN/YS BENS-YN/YS-L BENY-YN/YS
BENR-YN/YS BENR-YN/YS-L BENB-YN/YS

990902

12 ACCESSORIES

ITEM	LIST NO.	DESCRIPTION	Q'TY	NOTE
1	KW710031	Fluorescent lamp mount lower bracket	4	
2	KW710040	Fluorescent lamp mount bolt	4	
3	KW710010	Fluorescent lamp mount guide rail(1set)		
	KW710020	Fluorescent lamp mount guide rail(2set)		
4	HB710020	Fluorescent lamp mount plate		
5	HV710010	Fluorescent lamp MK-4111T3-A/B(100V)		
	HV710020	Fluorescent lamp MK-4111T4-A/B(200V)		
6	2CHT9##@@@	Spool stand for YN	1	## - Head Q'ty
	1HP##@@@	Spool stand for YS	1	@@@ - Needle space
7	HP241430	Thread tension unit complete(D=13.5)	H×9	
8	KF240900	Thread guide ceramic(For spool stand)	H×18	
9	HT710000	Spool stand pin	H×9	
10	HP710791	Spool stand base	10	
11		Hex.bolt M8×20		
12		Cap nut M8		
13		Truss screw M6×15		
14		Hex.socket bolt M8×45		
15		Flush screw M5×6		
16		Flush screw M4×12		
17		Hex.socket set screw M5×8		
18	KW710050	Spool stand fixing spacer	8	