Barudan

HIGH SPEED AUTOMATIC EMBROIDERY MACHINE

MODEL BENSH-YN

PARTS LIST

BARUDAN CO., LTD.

ADDRESS 906 JOSUIJI
ICHINOMIYA-CITY· AICHI-PREF·
JAPAN
TEL. (0586)76-1137
FAX. (0586)77-1499
TELEX 4573268 BARUNA J
CABLE BARUNA ICHINOMIYA

(IE)1.100A ①

HIGH SPEED AUTOMATIC EMBROIDERY

BENSH-YN

MACHINE PARTS LIST

C O N T E N T S

ITEM No.		Page No.
Machine layout BENSH-YN		1
①	Table・Frame	2
②	Bed a'ssy	4
③	Thread cutting mechanism Ⅰ (Thread cutting section)	6
④	Encoder a'ssy	8
⑤	Take up lever a'ssy Ⅰ	10
⑥	Take up lever a'ssy Ⅱ	12
⑦	Needle bar mechanism Ⅰ	14
⑧	Needle bar mechanism Ⅱ	16
⑨	Needle bar mechanism Ⅲ	18
⑩	Jump a'ssy	20
⑪	Thread guide mechanism	22
⑫	Thread cutting mechanism Ⅱ (Thread away section)	24
⑬	Thread cutting mechanism Ⅲ (Thread support section)	26
⑭	Thread cutting mechanism Ⅳ (Drive section)	28
⑮	Drive mechanism Ⅰ	30
⑯	Drive mechanism Ⅱ	32
⑰	Color change mechanism Ⅰ	34
⑱	Color change mechanism Ⅱ	36
⑲	Pantograph drive mechanism Ⅰ (Pantograph・Guide cover)	38
⑳	Pantograph drive mechanism Ⅱ (H-Direction・Front)	40
㉑	Pantograph drive mechanism Ⅲ (H-Direction・Rear)	42
㉒	Pantograph drive mechanism Ⅳ (H-Direction・Drive)	44
㉓	Pantograph drive mechanism Ⅴ (V-Direction・Two railes and LM guide use)	46
㉓	Pantograph drive mechanism Ⅴ (V-Direction・Three railes)	48
㉔	Pantograph drive mechanism Ⅵ (V-Direction・Drive)	50
㉕	Control system	52
㉖	Option	54
㉗	Thread guide mechanism (Lower thread sensorium)	56
INDEX		58

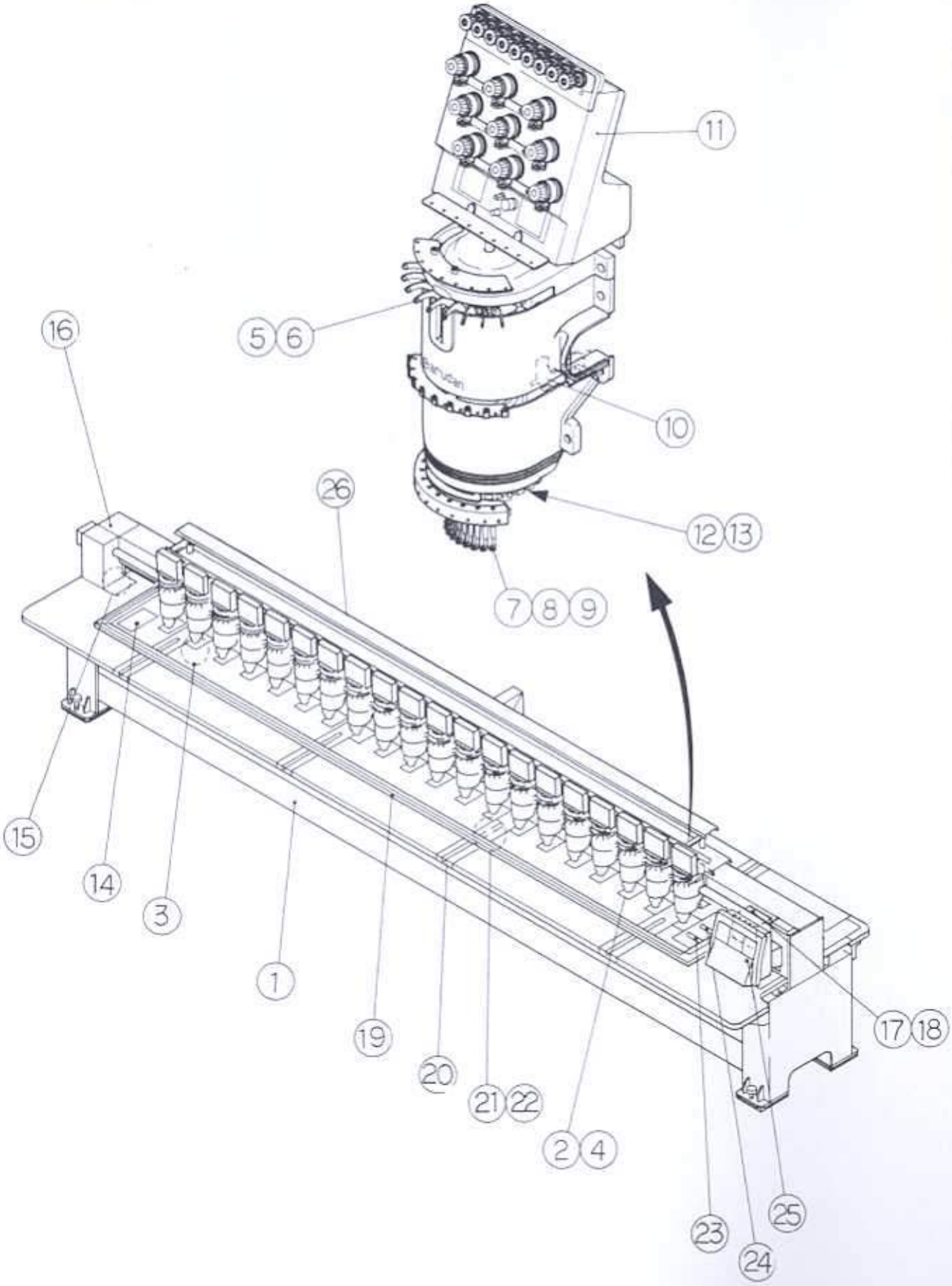
11
5 6
16
10
26
12 13
7 8 9
15
14
3
1
19
20
21 22
2 4
17 18
23
24
25

Barudan

① Table・Frame

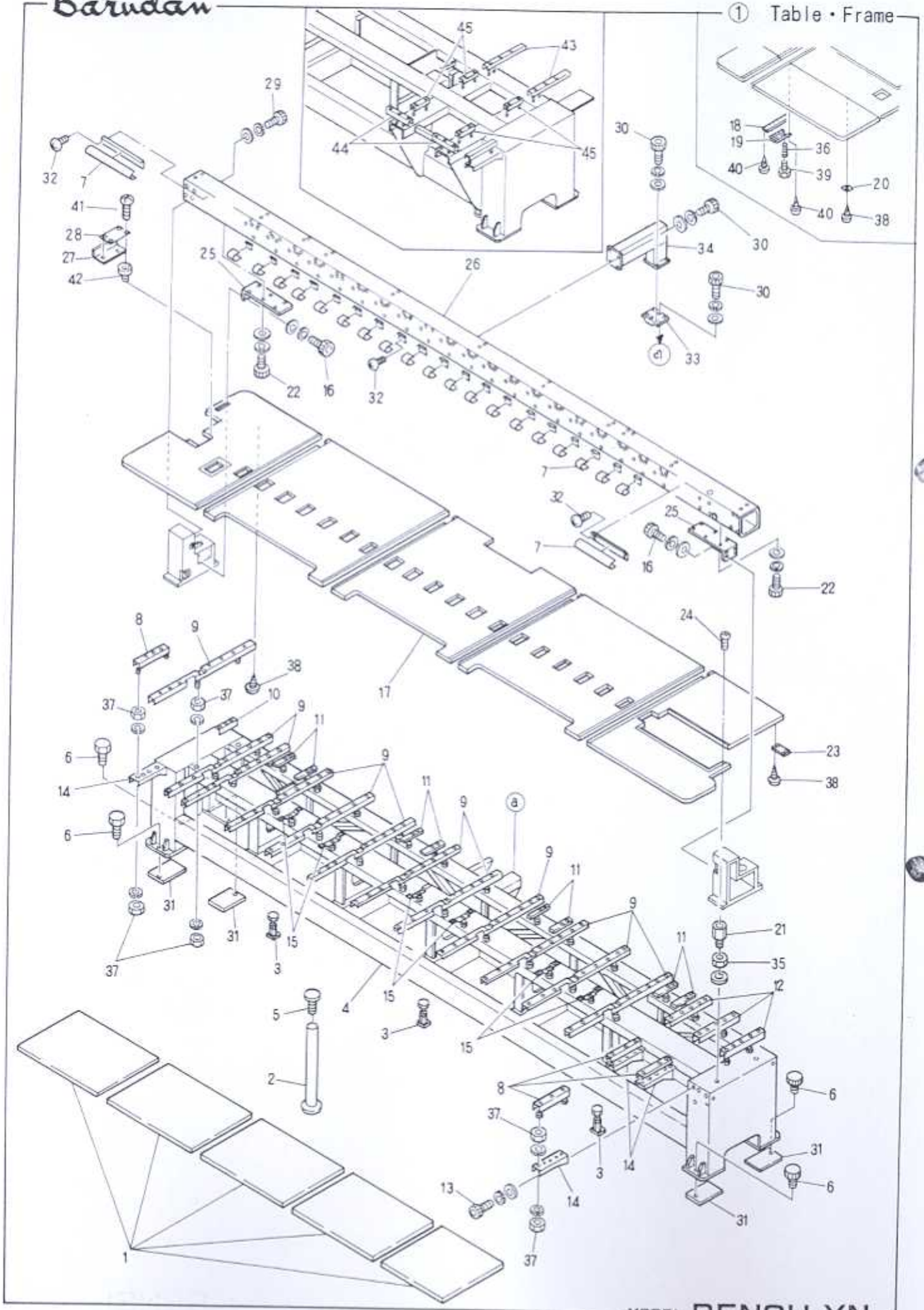

MODEL BENSH-YN

①Table · Frame

(※Change the LIST No. by machine type)

ITEM	LIST No.	DESCRIPTION	Q'TY	REMARK
1	1KHY3018560045H	Shelf board	1	※
2	WW140070	Table holder	5	
3	HP120020	M16 Mid jack bolt	6	
4	1AHB20240530450	Frame	1	※
5	A9012213	Level adjuster (C-1275-A-4)	5	
6		Hex. bolt M20×65	4	
7	1SHB20240530J	Shaft cover morl YS-20 P=240/530	1	※
8	HP140111	Table support (310L)	4	※
9	HP141450	Table support (1169L) With notch	12	※
10	HH140260	Table support (215L)	1	※
11	HP140841	Sub table support (215L)	8	
12	HP140490	Table support (480L)	4	※
13		Hex. socket bolt M8×20		
14	HP140120	Table support bracket	4	
15	HP141080	Sub table support (230L)	6	※
16		Hex. socket bolt M10×40		
17	1BHY3018560045H	Table	1	※
18	HP14010085	Table support (For H Strok 7850)	1	
19	HP140090	Table support		
20	HP141090	Morable table support		
21	HP140170	Table support bolt	1	
22		Hex. socket bolt M10×30		
23	KC140121	Table reinforcement plate	1	
24		Truss screw M6×35		
25	HP130021	Bridge support	2	
26	1EHY3018560045H	Bridge	1	※
27	HV310030	Shaft support cover	1	
28	HP321110	Lower shaft connecting coupling cover	1	
29		Hex. socket bolt M12×40		
30		Hex. socket bolt M8×25		
31	HP120030	Base plate (200×200×T1)	5	
32		Truss screw M5×10		
33	HB130040	Bridge support base (center)	1	
34	HB13008045	Bridge support H Strok 450	1	※
35		Hex. nut M8		
36	HH140940	Spring		
37		Hex. nut 3/8		
38		Truss pias biss 5×23		
39		Hex. bolt M8×25		
40		Wood screw 5.1×25		
41		Truss screw M8×25 (Undercut)		
42		Nut (C) M4		
43	HW140040	Table support (400L P=70)	2	
44	HW140050	Table support (240L P=70)	2	
45	HW140030	Table support (155L P=135)	4	

②Bed a'ssy

(H=Head Q'T)

ITEM	LIST No.	DESCRIPTION	Q'TY	REMARK
1	HP250763	Needle plate	H×1	
2	KF250900	Needle plate set screw (SM11/64 40×7)	H×3	
3	A9012154	Thrust washer TRA-512	H×1	
4	HP220712	Lower shaft gear (S)	H×1	
5	HB210230	Lower metal a'ssy (For small bobbin)	H×1	
	HB210240	Lower metal a'ssy (For middle bobbin)	H×1	
6	KF220440	Bobbin case (SC35-NS)	H×1	For small bobbin
	KF220302	Bobbin case BC-DBM(Z2)-NBL5 Middle bobbin	H×1	For middle bobbin
7	KF220410	Bobbin	H×1	For small bobbin
	KF220421	Bobbin (HSM) (DBM)(Aluminium. For middle bobbin)	H×1	For middle bobbin
8	KF220780	Rotating hook HSL-A(MIQ)TS	H×2	For small bobbin
	HB220010	Rotating hook HSL-A(M2QTS)Middle bobbin	H×2	For middle bobbin
9	HP220680	Lower shaft collar	H×1	For small bobbin
	HK220681	Lower shaft collar	H×1	For middle bobbin
10	HP220720	Lower shaft (Bevel gear)	H×1	For small bobbin
	HP220730	Lower shaft for middle bobbin (Bevel gear)	H×1	For middle bobbin
11	HP220701	Lower shaft metal (Bevel gear)	H×1	
12	KL220140	Oil felt C	H×1	
13	HH220570	Lower shaft metal oil felt	H×1	
14	KF220511	Rotating hook bobbin case holder position bracket	H×1	
15	HP210341	Bed (Bevel gear)	H×1	For small bobbin
	HP211050	Bed for middle bobbin	H×1	For middle bobbin
16	HP321082	Lower shaft connecting gear (Large gear)	H×1	
17	HP321090	Lower shaft connecting shaft collar	H×1	
18	A9014022	D=12 Blannking cover	H×1	
19		Screw (SM11/64 40×5)		
20		Hex. socket set screw M4×5		
21		Hex. socket set screw M5×5		
22		Flat screw (SM11/64 40×10)		
23		Flat set screw (SM11/64 40×4)		
24		Hex. socket set screw M5×10		
25		Hex. socket bolt M6×25		
26		Hex. socket set screw M5×8		
27	A9011111	Needle bearing(TLA-2012Z)	H×1	

(IE)1.100

③ Thread cutting mechanism I (Thread cutting section)

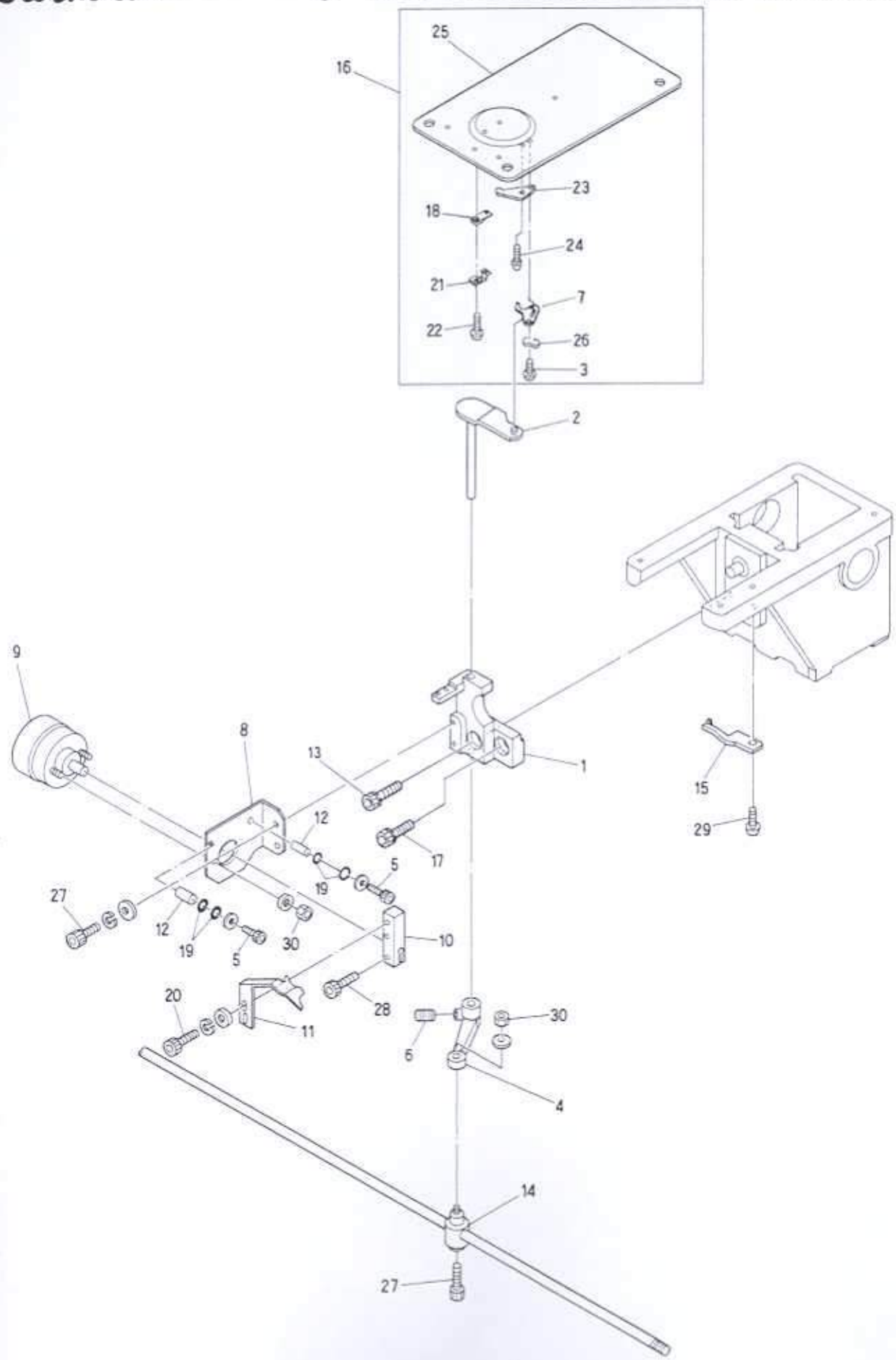

③ Thread cutting mechanism I (Thread cutting section)

(H=Head Q'TY)

ITEM	LIST No	DESCRIPTION	Q'TY	REMARK
1	KN271521	Thread cutter knife bracket	H×1	For small bobbin
	HP272550	Thread cutter knife bracket (Middle bobbin)	H×1	For middle bobbin
2	KN271980	Lower knife driving lever	H×1	For small bobbin
	HP272560	Lower knife driving lever (Middle bobbin)	H×1	For middle bobbin
3	KC270970	Lower knife turning shaft	H×1	
4	KN271560	Knife lever	H×1	
5		Hex. socket bolt M6 ×35 (with washer)		
6		Hex. socket set screw M5 ×6		
7	KN270952	Driving knife	H×1	
8	KN271620	Solenoid stay	H×1	For small bobbin
	HP272570	Solenoid stay (Middle bobbinn)	H×1	For middle bobbin
9	A9056010	Rotary solenoid (4EL25-33×3×8×9)	H×1	
10	KN271630	Solenoid lever	H×1	
11	KN271645	Upper thread hook	H×1	
12	KN272400	Stopper eccentric	H×2	
13		Hex. socket bolt M6×35(with spring washer)	H×1	
14	KF230640	Lock connecting bar clamp	H×1	
15	KF220511	Bobbin stopper	H×1	
16	HP272002	Throat plate CMP (for thread cutter knife)	H×1	
17		Hex. socket bolt M6×20(With spring washer)		
18	HT270160	Lower thread support stay (Upper)CMP	H×1	
19	KN272540	O-Ring (1AP8)	H×4	
20		Hex. socket bolt M3×10		
21	HT270180	Lower thread support stay (Lower)CMP	H×1	
22		Round screw M3×2		
23	KN270961	Fixed knife	H×1	
24	KC270980	Set screw (Fixed knife)	H×1	
25	HP250765	Needle plate	H×1	
26	A9013066	Wave washer (WW-5)	H×1	
27		Hex. socket bolt M4×8		
28		Hex. socket bolt M4×10		
29		Screw (SM11/64 40×10)		
30		Hex. nut M4		

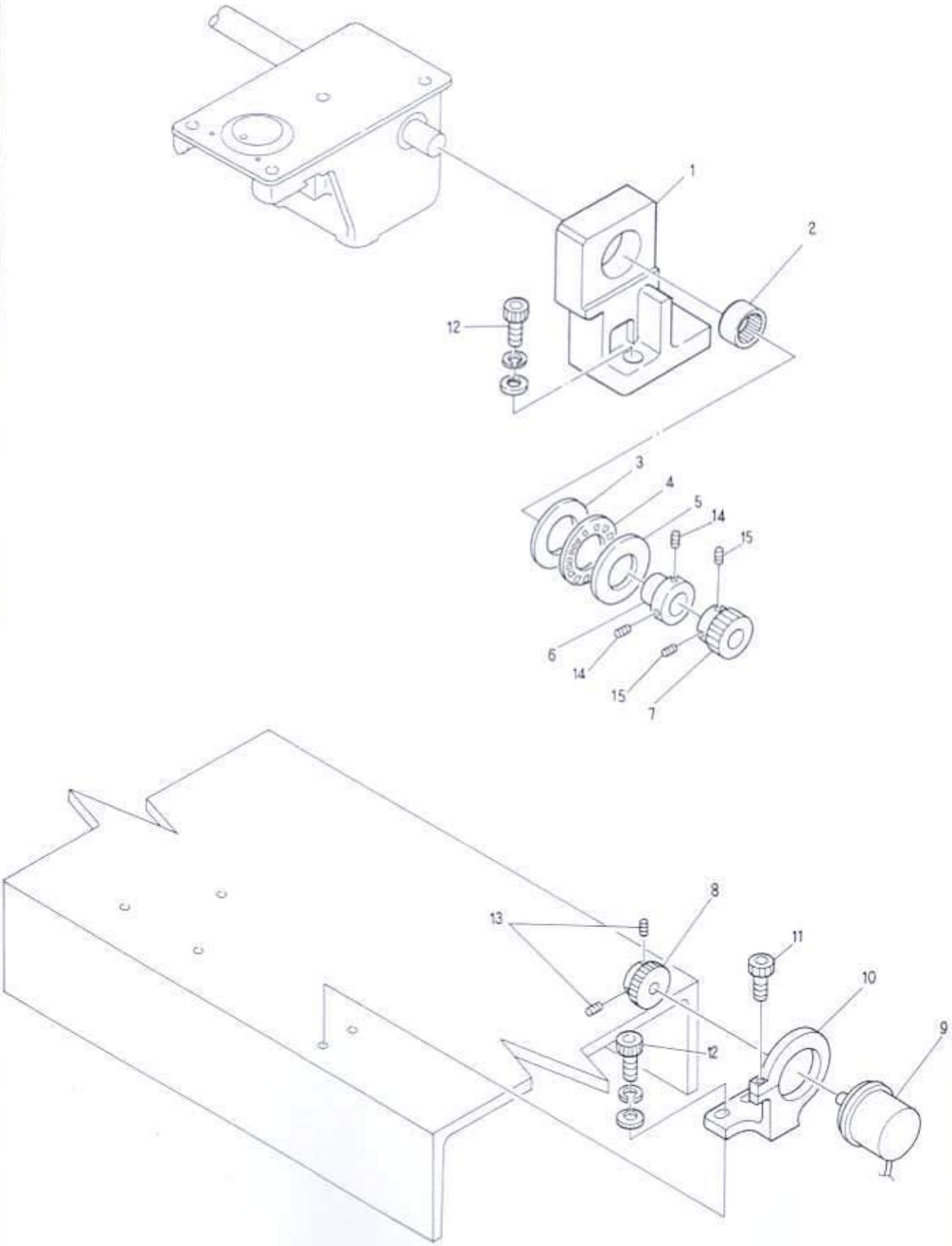
1
2
12
3
4
5
14
15
6
14
15
7
8
13
11
10
9
12

④ Encoder a'ssy

ITEM	LIST №	DESCRIPTION	Q'TY	REMARK
1	HB320030	Lower shaft connecting bearing base (Middle)	1	For middle bobbin
	HB320050	Lower shaft connecting bearing base (Small)	1	For small bobbin
2	A9011111	Needle bearing (TLA-2012Z)	1	
3	A9010101	Thrust bearing (WS81104)	1	
4	A9010100	Thrust bearing (AXK1104)	1	
5	A9010102	Thrust bearing (GS81104)	1	
6	HH481970	Pulse motor connecting shaft collar	1	
7	HP321710	Encoder driving gear №1	1	
8	HP321720	Encoder driving gear №2	1	
9	KN511020	Position coder (For machine 051)	1	
10	HP331922	Encoder retainer		
11		Hex. socket bolt M4×18		
12		Hex. socket bolt M6×25		
13		Hex. socket set screw M4×8		
14		Hex. socket set screw M5×8		
15		Hex. socket set screw M5×5		

(IE)1.100

⑤ Take up lever a'ssy I

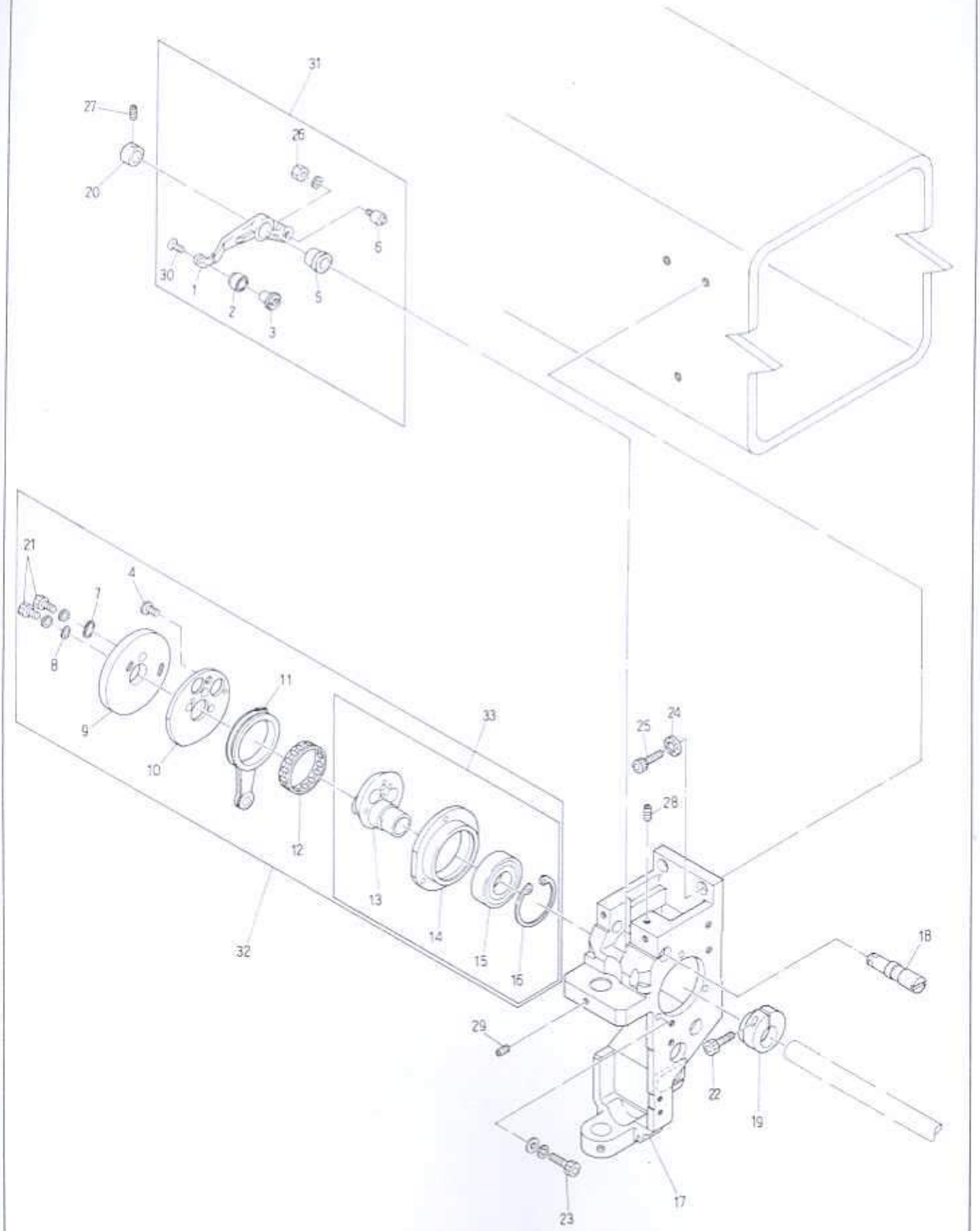

⑤ Take up lever a'ssy Ⅰ

(H=Head Q'T)

ITEM	LIST No.	DESCRIPTION	Q'TY	REMARK
1	HT230010	Take up lever driving lever(YN Bridge)	H×1	
2	HT230090	Take up lever driving roller(YN)	H×1	
3	HT230100	Take up lever driving roller shaft(YN)	H×1	
4	HB230620	Flush screw	H×3	
5	HB230111	Take up lever metal	H×1	
6	KF230500	Take up lever roller a'ssy	H×1	
7	HB230080	Washer for cam (2)	H×1	
8	HB230070	Washer for cam (1)	H×1	
9	HB230493	Take up lever cam JIB	H×1	For small bobbin
10	HB230051	Take up lever cam base	H×1	For middle bobbin
11	HB230020	Needle bar crank rod	H×1	
12	HB230341	Needle roller with retainer (HL-8Q-K38×41×8.8)	H×1	
13	HB230011	Needle bar driving cam (Eccentric 9.2)	H×1	
14	HB230030	Bearing case	H×1	
15	A90100017	Ball bearing case (6004ZZ)	H×1	
16	A90121663	C-Ring φ42	H×1	
17	HT230580	Arm	H×1	
18	HT230660	Take up lever driving lever fixed pin	H×1	
19	HB230040	Needle bar driving cam set collar	H×1	
20	HB230800	Driving lever set collar	H×1	
21		Hex. socket bolt M4×8		
22		Hex. socket bolt M5×18		
23		Hex. socket bolt M4×15		
24		Disc spring 8		
25		Hex. socket bolt M8×25		
26		Hex. nut 7/32		
27		Hex. socket set screw M4×4 (With adhesion)	H×1	
28		Hex. socket set screw M5×10		
29		Hex. socket set screw M4×8		
30	HB230650	Flush screw (With adhesion)	H×1	
31	HT230210	Take up lever driving lever a'ssy (YN Bridge)	H×1	
32	HB230691	Take up lever・Needle bar drive a'ssy	H×1	
33	HB230710	Needle bar driving cam a'ssy	H×1	

(IE)1.100

⑥ Take up lever a'ssy Ⅱ

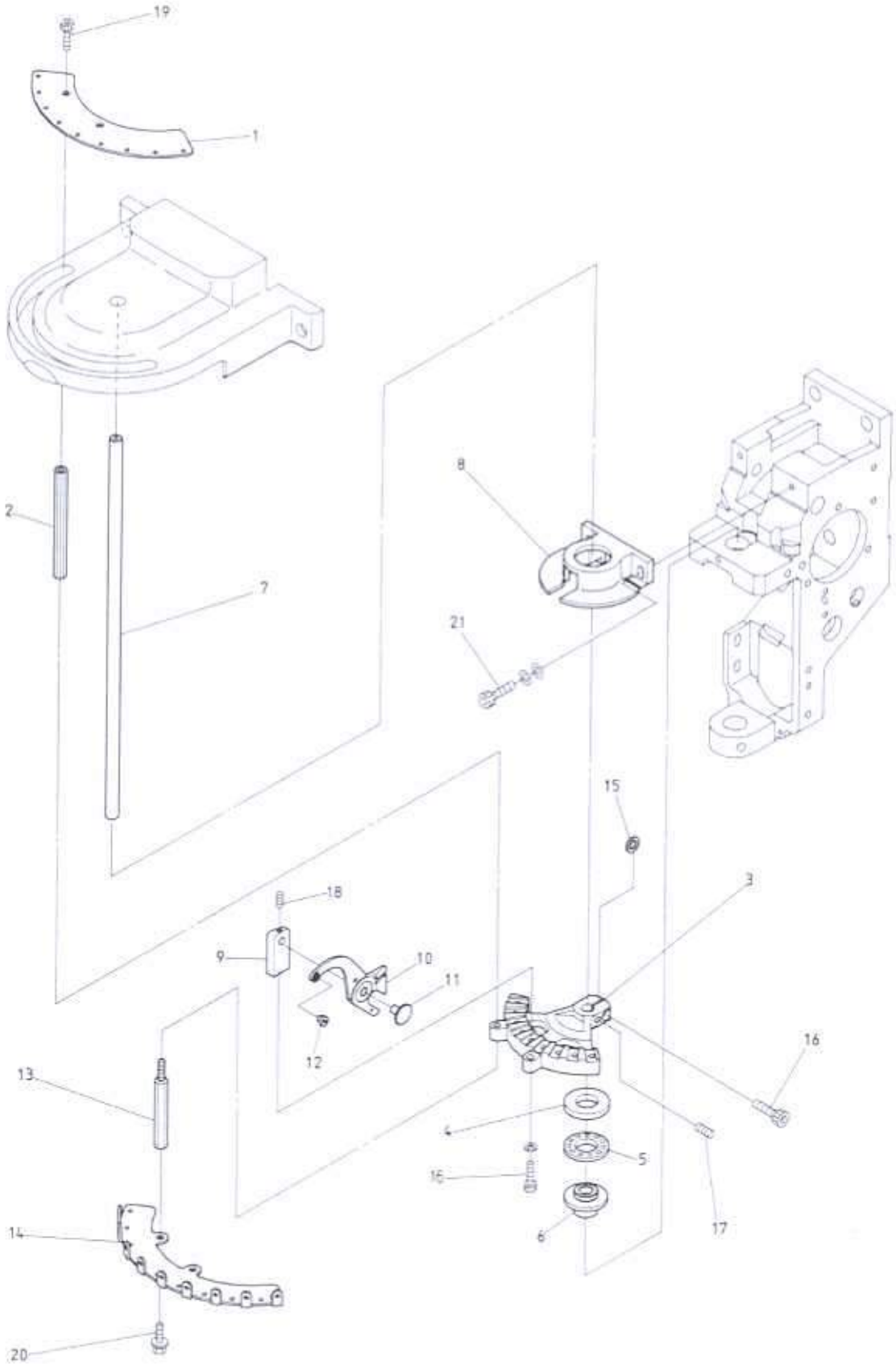

⑥ Take up lever a'ssy Ⅱ

(H=Head Q'TY)

ITEM	LIST No.	DESCRIPTION	Q'TY	REMARK
1	HT240000	Thread guide plate	H×1	
2	HB240151	Thread guide fixing shaft (Upper)	H×1	
3	HT230020	Take up lever fixing bracket	H×1	
4	A9011152	Thrust needle bearing inter (WS1528)	H×1	
5	A9011021	Thrust bearing (NTB-1528)	H×1	
6	HT230300	Driving shaft upper metal	H×1	
7	HT230540	Driving shaft	H×1	
8	HT230030	Take up lever atocker	H×1	
9	HT230070	Take up lever base	H×9	
10	HT230170	Take up lever	H×9	
11	HT230080	Take up lever shaft	H×9	
12	HB230750	Take up lever thread guide	H×9	
13	HB240161	Thread shaft fixing shaft (Lower)	H×2	
14	HT240010	Thread hanger	H×1	
15	HT230270	Washer (For take up lever fixing bracket)		
16		Hex. socket bolt M4 ×14		
17		Hex. socket set screw M4 ×5 (C.P)		
18		Hex. socket set screw M3 ×4 (With adhesion)		
19		Hex. socket bolt M4 ×6		
20		Hex. socket bolt M4 ×6 (With washer)		
21		Hex. socket bolt M4 ×12		

⑦ Needle bar mechanism I

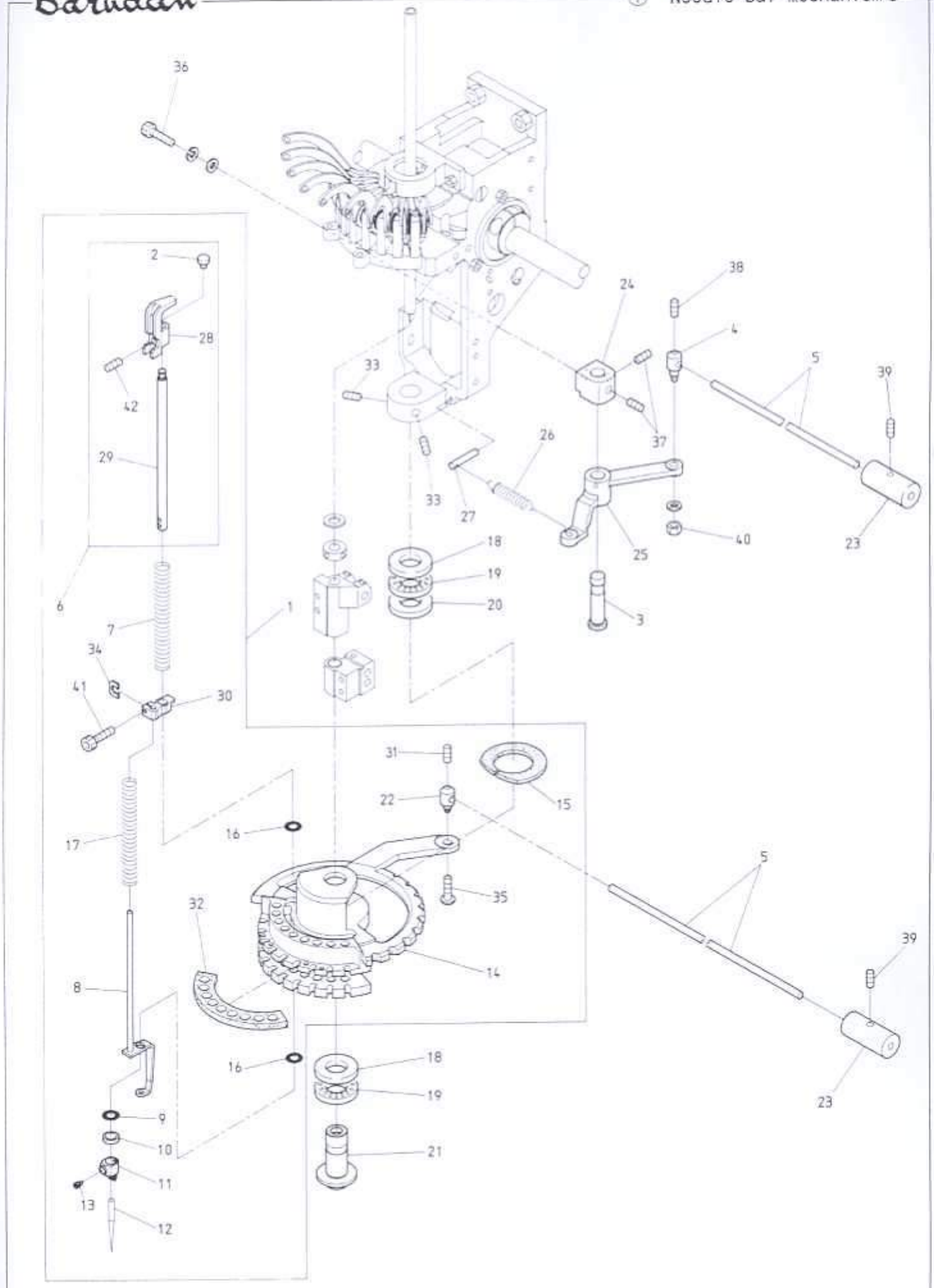

⑦ Needle bar mechanism I

(H=Head Q'TY)

ITEM	LIST No	DESCRIPTION	Q'TY	REMARK
1		Turning plate a'ssy	H×1	
2	HT230130	Needle bar cap	H×9	
3	HB230190	Lock lever shaft	H×1	
4	KF230640	Lock connecting bar clamp	H×1	
5	KC330410	Lock connecting rod (L=2000)	6	
6	HT230810	Needle bar a'ssy	H×9	
7	HT230251	Needle bar spring (Upper)	H×9	
8	HT230141	Pressure foot	H×9	
9	KF230910	O-Ring (Small) P-6	H×9	
10	HT230120	Washer 2.4	H×9	
11	HT230670	Needle clamp (With hook)	H×9	
12	KF230250	Needle (DBK5-11)	H×9	
13	KF230240	Needle clamp screw (SM9/64)	H×9	
14	HT230570M	Turning plate	H×1	
15	HT230690	Turning plate felt (Upper)	H×1	
16	A9014055	O-Ring (IAS-7) S-7	H×1	
17	HT230062	Needle bar spring (Under)	H×18	
18	A9011023	Thrust bearing outer (GS1528)	H×2	
19	A9011021	Thrust bearing (NTB-1528)	H×2	
20	A9011022	Thrust washer (AS-1528)	H×1	
21	HT230550	Driving shaft lower metal	H×1	
22	HT230180	Turning plate joint pin	H×1	
23	KF330180	Lock bar hand grip	4	
24	HB230180	Lock lever bracket	H×1	
25	KL230180	Lock lever	H×1	
26	KF230661	Lock lever spring	H×1	
27	KF230670	Lock lever spring pin	H×1	
28	HT230151	Needle bar guide	H×1	
29	HT230041	Needle bar	H×1	
30	HT230330	Cloth winder stop latch set clamp	H×1	
31		Hex. socket set screw M4 ×4		
32	HT230111	Turning plate felt	H×1	
33	A9012053	Hex. socket set screw (With steel ball) M6 ×0.7×8	H×2	
34	HT230262	Washer (For set clamp)	H×9	
35		Hex. socket button bolt M4 ×5		
36		Hex. socket bolt M8 ×18		
37		Hex. socket set screw M6 ×6		
38		Hex. socket set screw M4 ×6		
39		Hex. socket set screw M5 ×5		
40		Hex. nut M4 (Ⅱ)		
41		Hex. socket bolt M3 ×8		
42		Hex. socket set screw M4 ×4 (With adhesion)		

⑧ Needle bar mechanism II

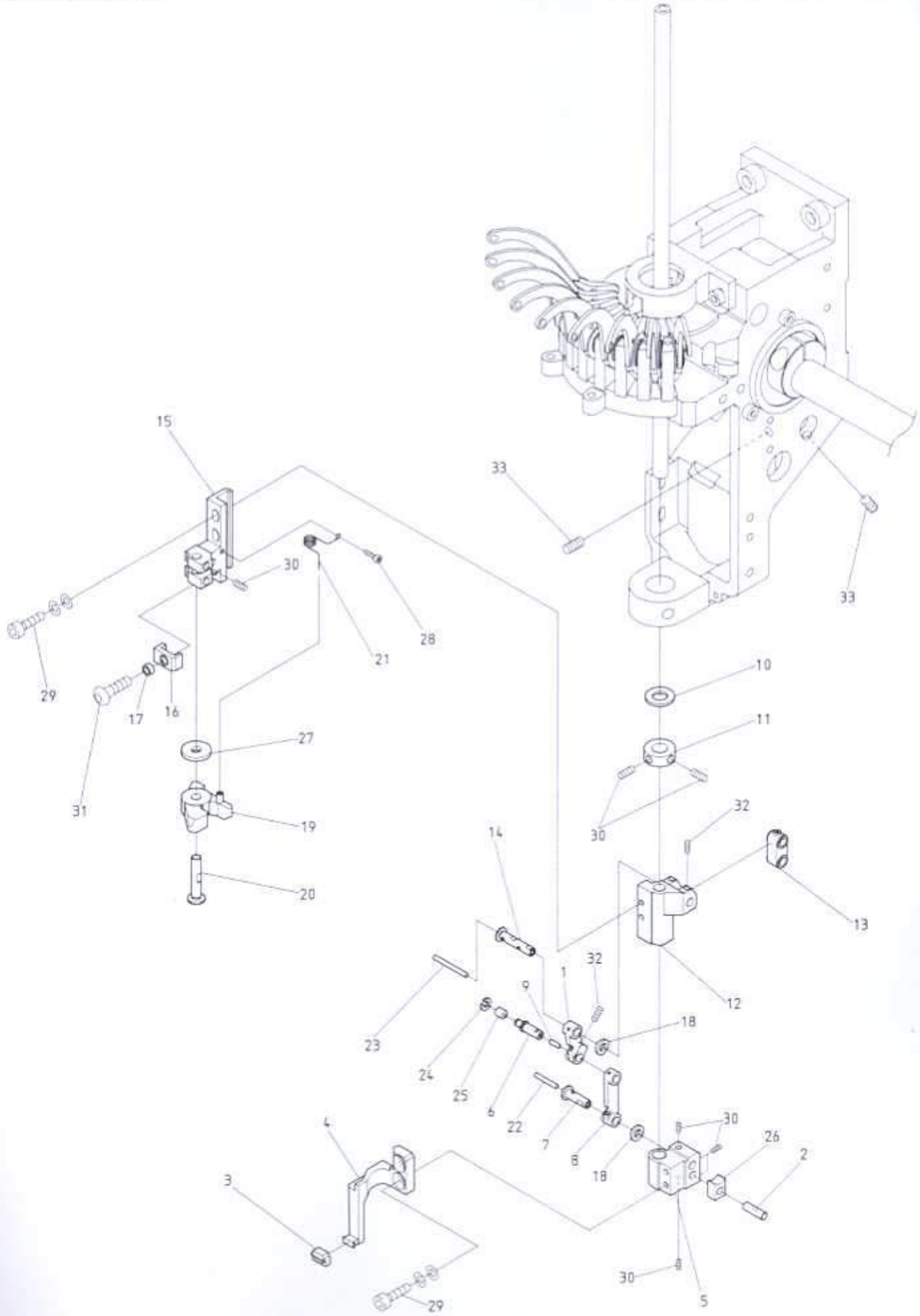

⑧ Needle bar mechanism Ⅱ

(H=Head Q'TY)

ITEM	LIST No.	DESCRIPTION	Q'TY	REMARK
1	HT230490	Link (Small)	H×1	
2	HT230320	Square ball pin	H×1	
3	HT230340	Pressure foot support rubber	H×1	
4	HT230370	Pressure foot support	H×1	
5	HT230500	Set slide block	H×1	
6	HT230450	Link roller joint pin	H×1	
7	HT230460	Link pin (Large)	H×1	
8	HT230480	Link (Large)	H×1	
9	HT230760	Oil core (8mm)	150	
10	A9012164	Thrust washer (R-TW0815)	H×1	
11	HB230160	Driving shaft set collar	H×1	
12	HT230510	Needle bar driving block	H×1	
13	HT230200	Needle bar driving link	H×1	
14	HT230470	Link pin (Small)	H×1	
15	HT230290	Needle bar driving fixing base	H×1	
16	HT230520	Needle bar driving stopper	H×1	
17	A9012368	Spacer (Coil bush)	H×1	
18	HT230730	Shim-Ring (φ10 t=0.3)	H×2	
19	HT230530	Needle bar driving	H×1	
20	HT230280	Needle bar driving pin	H×1	
21	HT230560	Needle bar driving return spring	H×1	
22	HT230770	Oil core (20mm)	150	
23	HT230750	Oil core (30mm)	150	
24		E-Ring (φ3)		
25	KF230530	Roller (For take up lever)	H×1	
26	HP231370	Square ball	H×1	
27	A9012367	Shim-Ring (φ15 t=0.15)	H×1	
28		Hex. Socket bolt M2.5 ×6		
29		Hex. socket bolt M4 ×12		
30		Hex. socket set screw M4 ×4 (With nylon)		
31		Hex. socket button bolt M3 ×6		
32		Hex. socket set screw M4 ×6 (With nylon)		
33		Hex. socket set screw M5 ×10		

(IE)1.100

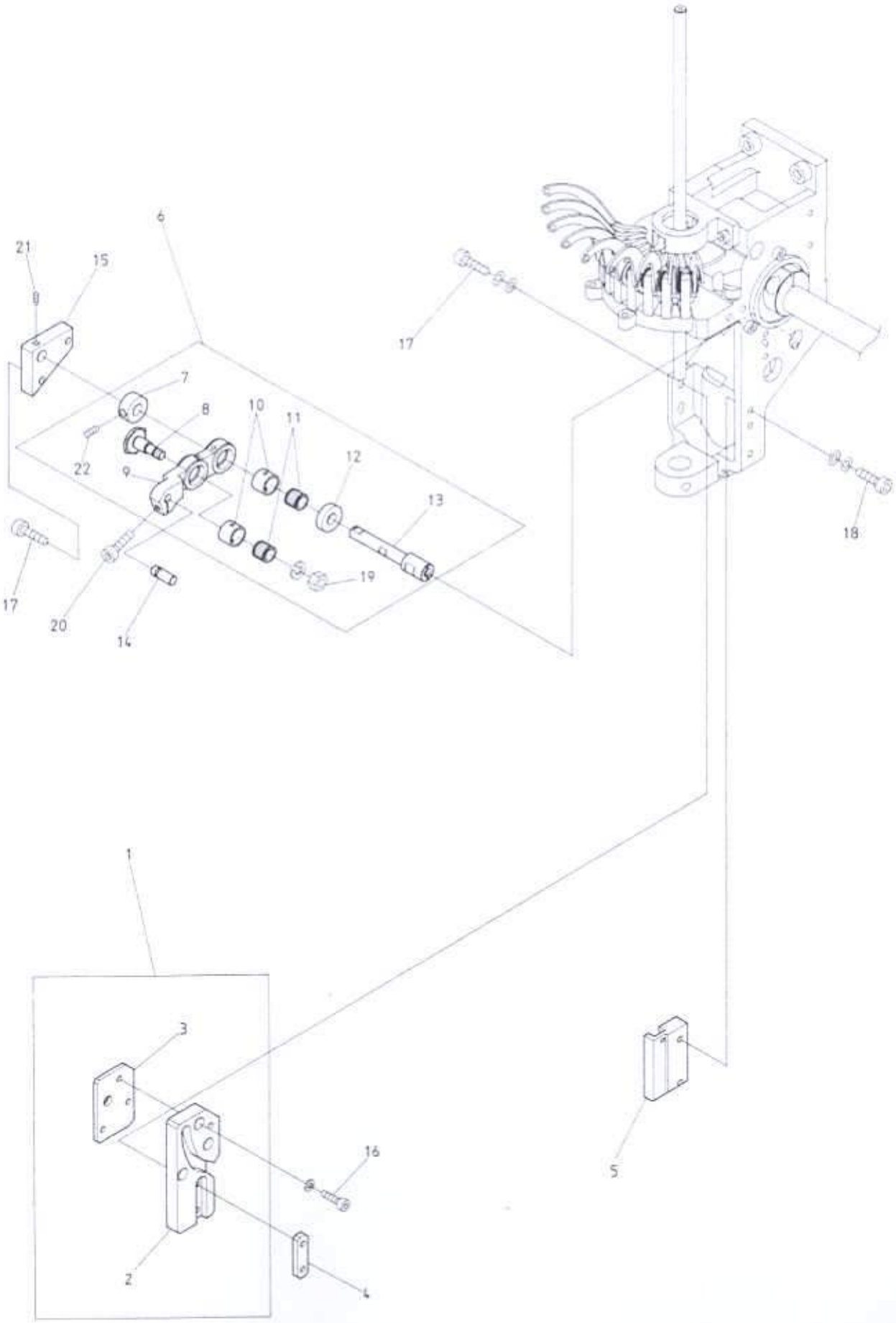
21
15
6
17
7
8
10
11
22
9
12
13
18
17
20
14
19
1
3
16
5
2
4

⑨ Needle bar mechanismⅢ

(H=Head Q'TY)

ITEM	LIST No.	DESCRIPTION	Q'TY	REMARK
1	HT230610	Pressure foot cam assy	H×1	
2	HT230720	Pressure foot cam (K2)	H×1	
3	HT230600	Cam back up plate	H×1	
4	HT230380	Cam tap plate	H×1	
5	HT230420	Guide plate	H×1	
6	HB230701	Needle bar driving lever set	H×1	
7	HB230271	Needle bar driving lever fixed pin set collar	H×1	
8	HB230261	Needle bar driving lever connecting pin	H×1	
9	HB230241	Needle bar driving lever	H×1	
10	HB230350	Outer (OR11×14×10×1)	H×2	
11	HB230360	Needle roller with retainer (80-K8×11×10)	H×2	
12	HB230281	Needle bar driving lever fixed pin collar	H×1	
13	HT230410	Needle bar driving lever fixed pin	H×1	
14	HB230220	Needle bar driving lever pin (8)	H×1	
15	HT230590	Lever pin block	H×1	
16		Hex. Socket bolt M4×8		
17		Hex. socket bolt M4×15		
18		Hex. socket bolt M4×18		
19		Hex. nut M6		
20		Hex. socket bolt M4×12 (With adhesion)		
21		Hex. socket set screw M4×4 (With nylon)		
22		Hex. socket set screw M5×5		

(IE)1.100

⑩ Jump a' ssy

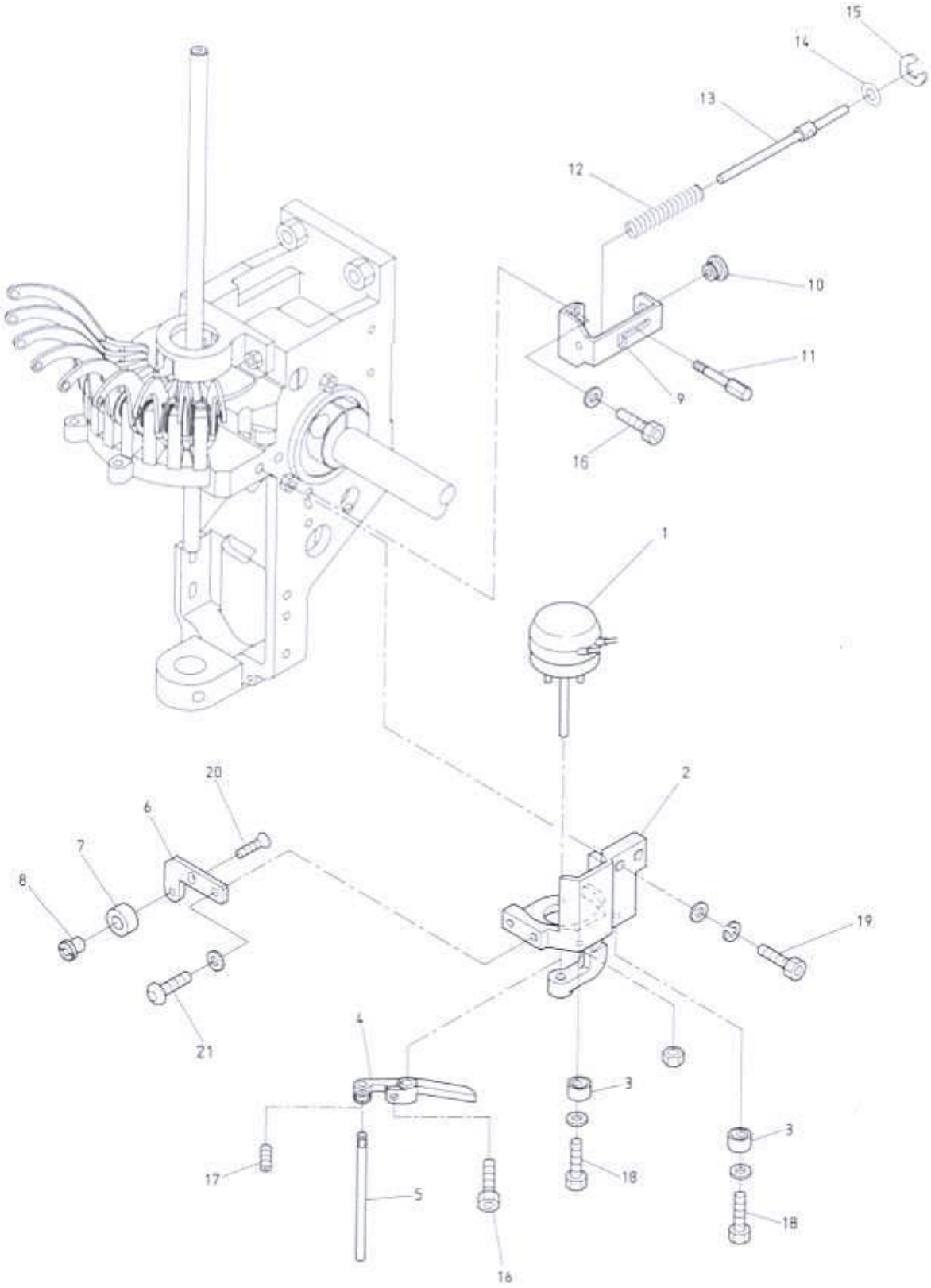

⑩ Jump a'ssy

(H=Head Q'TY)

ITEM	LIST No.	DESCRIPTION	Q'TY	REMARK
1	A905602.0	Rotary solenoid (3ER35-35×3×8×9 L=45)	H×1	
2	HB240011	Jump solenoid fixing bracket	H×1	
3	HB240041	Jump eccentric	H×2	
4	HB240020	Jump solenoid lever	H×1	
5	HB240030	Jump solenoid lever pin	H×1	
6	HT230630	Needle bar stopper fixing bracket	H×1	
7	HT230220	Needle bar stopper	H×1	
8	HT230620	Needle bar stopper fixing pin	H×1	
9	HB240060	Cancel bracket	H×1	
10	HB240090	Cancel rod guide	H×1	
11	HB240080	Manual cancel pin	H×1	
12	HB240110	Cancel return spring	H×1	
13	HB240070	Cancel rod	H×1	
14	A901405 1	O-Ring (P-5)	H×1	
15	A901205 1	E-Ring φ6	H×1	
16		Hex. socket bolt M4 ×8		
17		Hex. socket set screw M4 ×4 (With adhesion)		
18		Hex. socket bolt M4 ×12 (With adhesion)		
19		Hex. socket bolt M5 ×18		
20		Flush bolt M4 ×8		
21		Hex. socket button bolt M4 ×10		

(IE)1.100

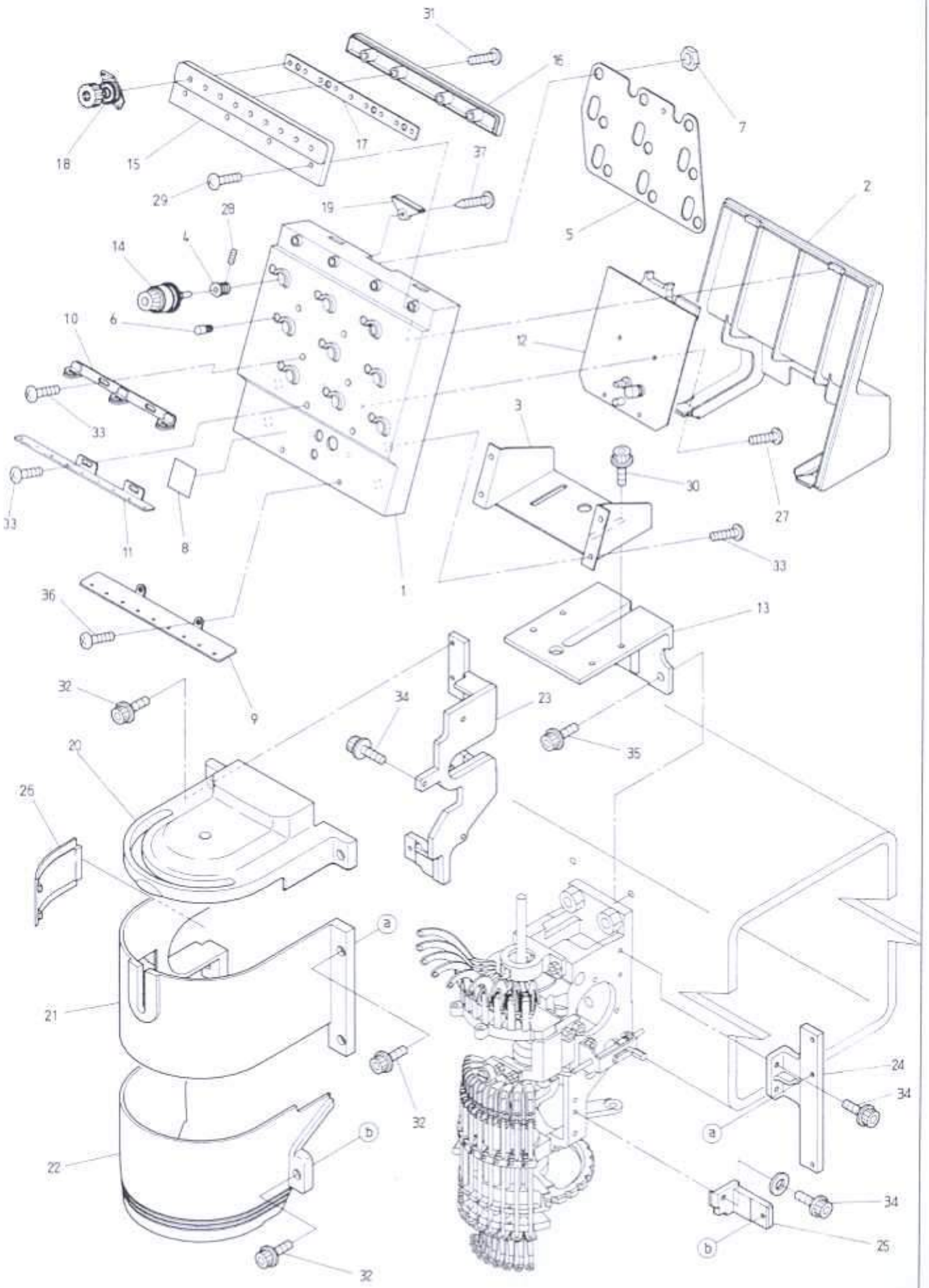
31
16
7
18
15
17
37
29
19
2
28
5
14
4
10
6
12
33
3
30
27
33
11
8
33
1
36
13
9
32
34
23
35
20
26
a
21
24
32
34
a
22
b
34
b
25
32

⑪ Thread guide mechanism

(H=Head Q'TY)

ITEM	LIST No.	DESCRIPTION	Q'TY	REMARK
1	HT240120	Tension base case	H×1	
2	HT240130	Tension base cover	H×1	
3	HT240140	Tension base	H×1	
4	HT240150	Base	H×9	
5	HT240160	Tension earth plate	H×1	
6	HT240170	Upper thread detection pin	H×9	
7	HT240180	SM-Nut	H×9	
8		No. Label	H×1	
9	HT240020	Second thread guide plate	H×1	
10	HT240061	First thread guide	H×2	
11	HT240390	Thread guide plate	H×1	
12	EBY01110	4619 Head board	H×1	
13	HB240300	Tension base bracket [Bridge (MSH)]	H×1	
14	HT240520	Dial type tension unit complete (YN)	H×9	
15	HT240211	Upper thread guide fixing case	H×1	
16	HT240220	Upper thread guide fixing cover	H×1	
17	HT240230	Upper thread guide fixing base	H×1	
18	HT240331	Thread guide for second tension (Pinless)	H×9	
19	HT240240	Blind cap	H×1	
20	HB240200	Sewing head cover (A)	H×1	
21	HT240460	Sewing head cover (B) (YN-2)	H×1	
22	HT240220	Sewing head cover (C)	H×1	
23	HT240430	Sewing head cover fixing bracket (A)	H×1	
24	HB240240	Sewing head cover fixing bracket (B)	H×1	
25	HT240440	Sewing head cover fixing bracket (C)	H×1	
26	HT240470	Supply of oil cover	H×1	
27		Tapping pan screw Tight M3 ×8		
28		Hex. socket set screw M4 ×12		
29		Pan screw M3 ×6		
30		Hex. socket bolt with washer M5 ×10		
31		Tapping screw (II) M3 ×12		
32		Hex. socket bolt (With washer) M4 ×6		
33		Truss screw M4 ×10		
34		Hex. socket flange bolt M4 ×10		
35		Hex. socket flange bolt M6 ×20		
36		Tapping truss screw M4 ×10		
37		Tapping screw M3 ×12		

⑫ Thread cutting mechanism Ⅱ
(Thread away section)

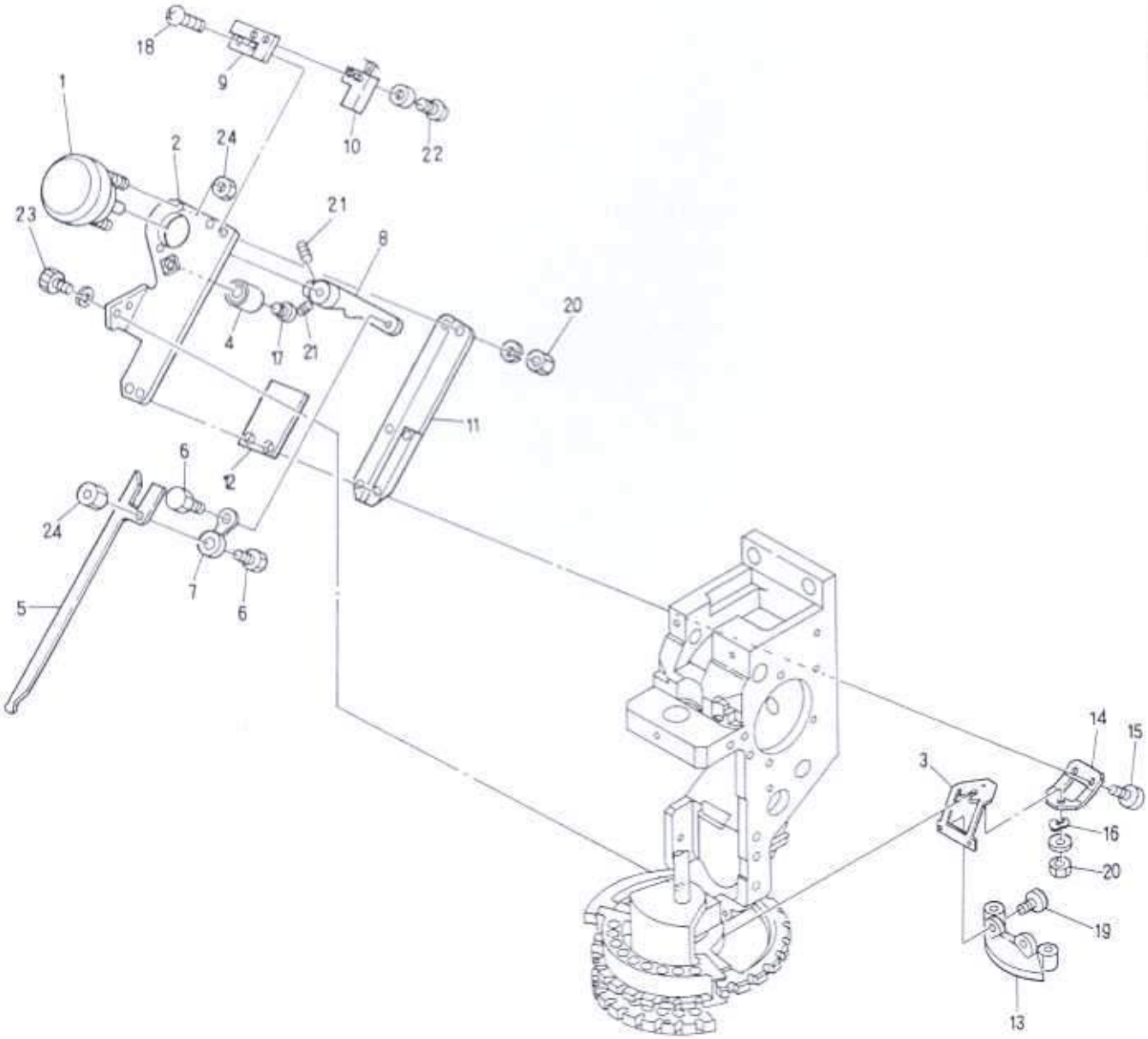

MODEL BENSH-YN

⑫ Thread cutting mechanism Ⅱ (Thread away section)

(H=Head Q'TY)

ITEM	LIST No	DESCRIPTION	Q'TY	REMARK
1	A9056018	Rotary solenoid (4ER67.5-34×8×9) orange	H×1	
2	KL270081	Thread away base	H×1	
3	HT270070	Thread hook disk fixing stay	H×1	
4	KN272400	Stopper eccentric	H×1	
5	KL270101	Thread away hook	H×1	
6	KL270130	Lever connecting pin	H×1	
7	KL270120	Connecting plate	H×1	
8	KL270110	Thread away solenoid lever	H×1	
9	KL270260	Switch stay	H×1	
10	A9052028	Proximity switch (RS-603)	H×1	
11	KL270091	Thread away hook guide	H×1	
12	KL270450	Hook guide plate	H×1	
13	KL270440	Thread hook disk CMP	H×1	
14	HT270110	Rotary shaft fixing stay	H×1	
15		Truss screw M3×7		
16	A9013045	Wave washer (For M5)	H×1	
17		Truss screw M4×16		
18		Truss screw M3×10		
19		Truss screw M3×4		
20		Hex. nut M3		
21		Hex. socket set screw M4×8		
22		Truss screw M3×6		
23		Hex. socket bolt M4×12		
24		Hex. nut M4		

⑬ Thread cutting mechanism Ⅲ
(Thread support section)

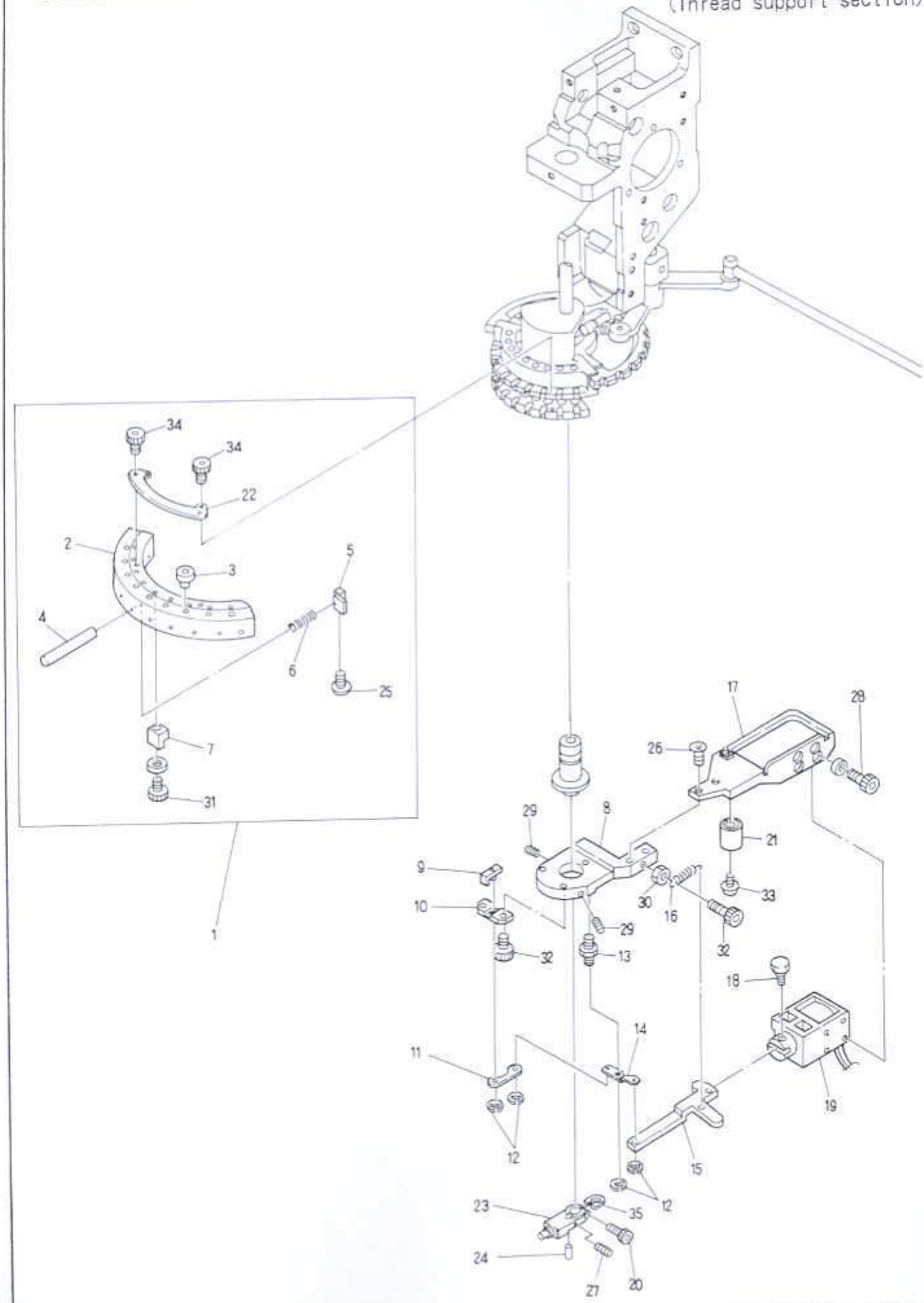

⑬ Thread cutting mechanismⅢ (Thread support section)

(H=Head Q'TY)

ITEM	LIST No.	DESCRIPTION	Q'TY	REMARK
1	HT270030	Thread support apron a'ssy	H×1	
2	HT270001	Thread support apron	H×1	
3	KF230580	Take up lever ceramic	H×9	
4	HT270040	Thread support shaft	H×9	
5	HT270021	Thread support clamp	H×9	
6	KC270271	Support spring	H×9	
7	KC270292	Thread support block	H×9	
8	KL270000	Fixing base φ3	H×1	
9	HT270120	Thread support slider	H×1	
10	HT270100	Slide base	H×1	
11	HT270080	Driving plate	H×1	
12	A9012056	E-Ring φ3	H×4	
13	KL270040	Lever rotary shaft	H×1	
14	HT270090	Solenoid lever	H×1	
15	KL270060	Lever connecting plate	H×1	
16	KL270520	Return spring	H×1	
17	KL270070	Solenoid stay	H×1	
18	KC270101	Solenoid pin	H×1	
19	A9056013	Keep solenoid (TDS-K10SL)	H×1	
20	HT270640	Driving shaft fixing clamp bolt	H×1	
21	KN272400	Stopper eccentric	H×1	
22	HT270010	Thread support apron fixing stay	H×1	
23	HT230361	Driving shaft fixing plate	H×1	
24	HT270350	Thread hook disk fixing pin	H×1	
25	HT270062	Set screw for thread support clamp	H×9	
26		Flush screw M4×8		
27		Set screw M3×5		
28		Hex. socket bolt M3×6		
29		Hex. socket set screw M4×8		
30		Hex. nut M4		
31		Hex. socket bolt M3×10		
32		Hex. socket bolt M4×8		
33		Truss screw M4×16		
34		Hex. socket bolt (Plating) M3×6		
35	HT230830	Washer for driving shaft fixing plate	H×1	

⑭ Thread cutting mechanismⅣ (Drive section)

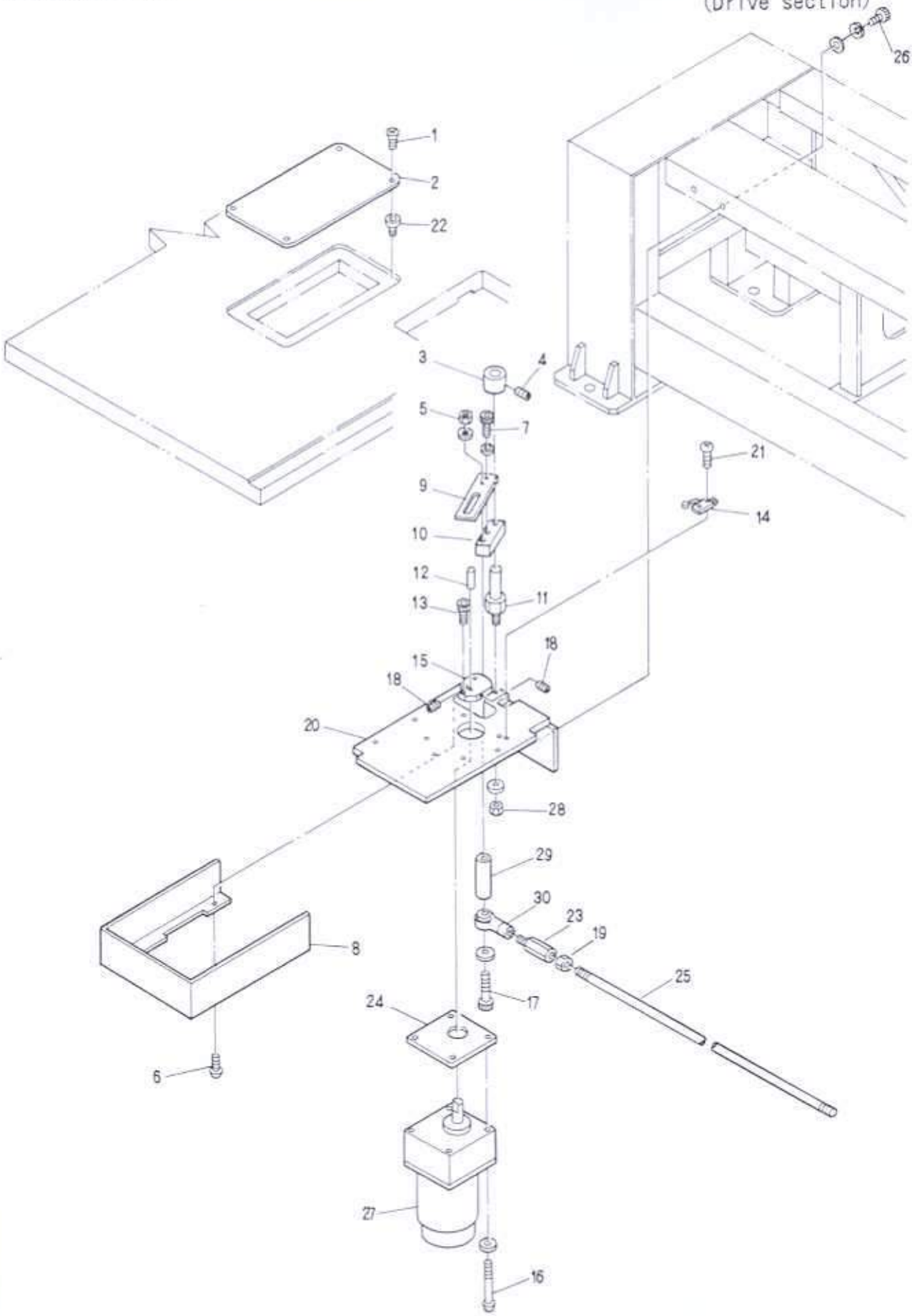

⑭ Thread cutting mechanismⅣ (Drive section)

ITEM	LIST №	DESCRIPTION	Q'TY	REMARK
1		Flush screw M4×8(Undercut)		
2	KC271440	Driving service cover	1	
3	KC330180	Collar φ10	1	
4		Hex. socket set screw M5×6		
5		Hex. nut M6		
6		Truss screw M3×6		
7		Hex. socket bolt M6×12		
8	KN271712	Motor bracket cover	1	
9	KN271990	Motor lever	1	
10	KN271781	Driving lever	1	
11	KN271750	Motor lever rotary	1	
12	KN272350	Driving pin	1	
13		Hex. socket bolt M4×10		
14	A9052005	Micro switch (V-01GL2235)	1	
15	KN271732	Driving cam		
16		Pan screw M4×60		
17		Hex. socket bolt M6×55		
18		Hex. socket set bolt M5×8		
19		Hex. nut M5		
20	HP271700	Motor bracket	1	
21		Truss screw M3×15		
22		Nut (C) M4		
23	HH330760	Hex. connecting bar	1	
24	KN271720	Motor spacer	1	
25	KC330410	Lock connecting rod (2M)	2	
26		Hex. socket bolt M8×25		
27	A9065028	Reversible motor (RM-F7A12PEAA)(7RHD30)	1	
28		Hex. nut M8		
29	KN271800	Driving lever collar	1	
30	A9012002	Uniball joint (PR-6)	1	

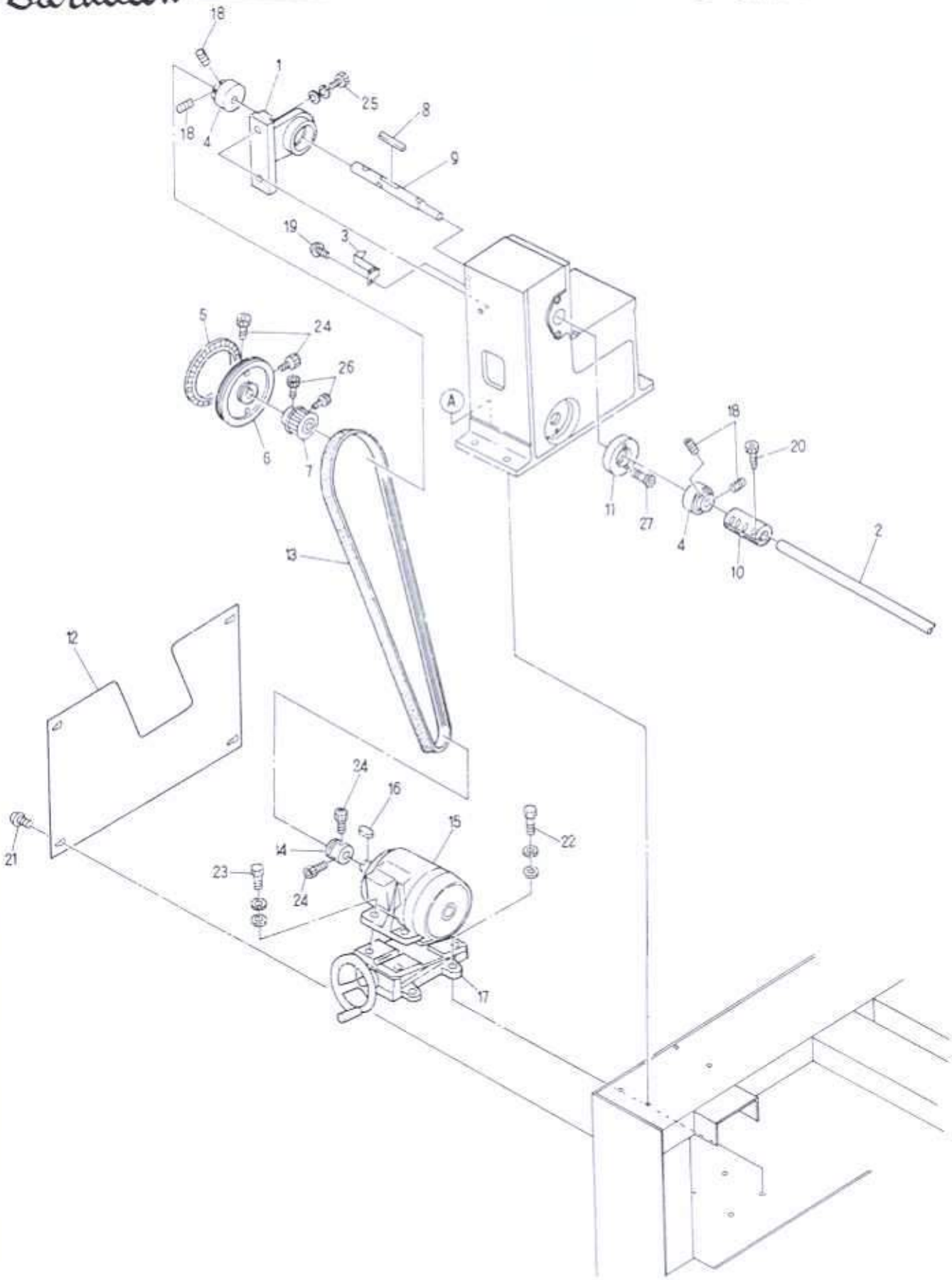
18
1
25
8
18
4
9
19
3
5
24
26
A
18
20
6
7
11
27
4
2
13
10
12
24
16
15
22
21
14
23
24
17

⑮ Drive mechanism Ⅰ

ITEM	LIST No.	DESCRIPTION	Q'TY	REMARK
1	HB310110	Bearing unity (Upper shaft)	1	
2	KC320820	Upper shaft connecting shaft 15×5700		
3	HV310110	Angle gauge	1	
4	A9011040	Bearing (RB-204)	2	
5	KN313670	Angle label (A)	1	
6	KN310000	Drivung pulley φ152.2	1	
7	HB310070	Timing pulley (8M-23)	1	
8	HV310070	Key (Both round) 6×6×47	1	
9	HV310040	Upper shaft (Gear box L)		
10	HH320550	Upper shaft connecting coupling	1	
11	HB310140	Housing (For lower shaft)	1	
12	HV310120	Cover (Motor section)	1	
13	A9020171	Belt (4PK1160)	1	
14	KN310010	Motor pully φ48.6	1	
15	HB310280	Motor (FBK8-4P-0.75KWVF3)(With cable)	1	
16	HV310050	Key (Side round) 6×6×35	1	
17	HP310220	Motor base (R-05)	1	
18		Hex. socket set screw M6×6		
19		Truss screw M4×6		
20		Hex. socket bolt M6×20		
21		Truss screw M6×8		
22		Hex. bolt M8×30		
23		Hex. bolt M8×25		
24		Hex. socket bolt M6×15		Key side
		Hex. socket bolt M6×18		
25		Hex. socket bolt M10×35		
26		Hex. socket bolt M6×12		Key side
		Hex. socket bolt M6×15		
27		Hex. socket bolt M6×25		

⑯ Drive mechanism II

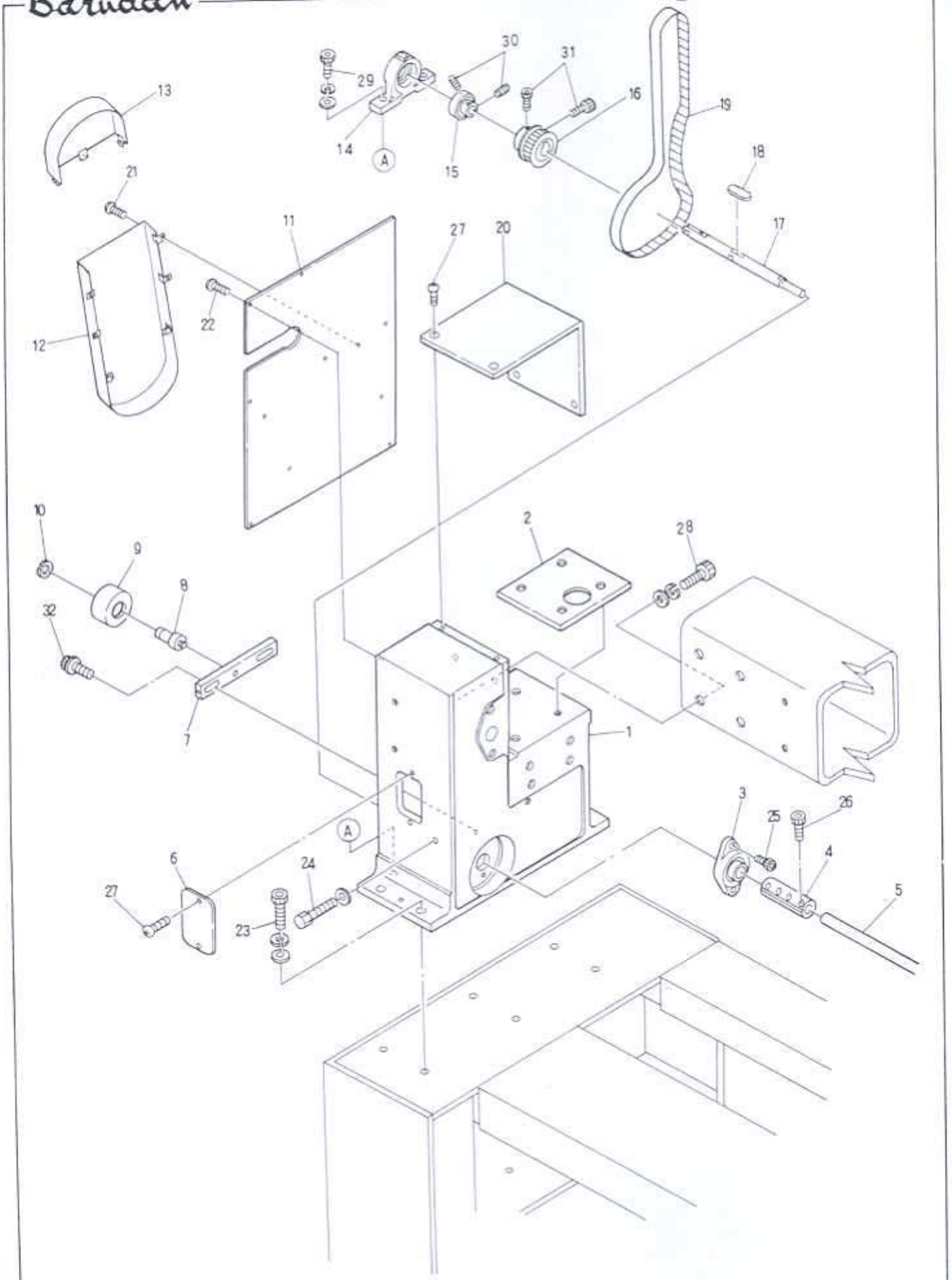

MODEL BENSH-YN

⑯ Drive mechanism Ⅱ

LTEM	LIST №	DESCRIPTION	Q'TY	REMARK
1	HV310020	Gear box (L)	1	
2	HB130020	Bridge fixing spacer T=1	1	
	HB130030	Bridge fixing spacer T=0.5	1	
3	A9011035	Bearing unit (UCFL204)	1	
4	HP321100	Lower shaft connecting coupling	1	
5	KC320820	Upper shaft connecting shaft 15×5700	1	
6	HB310160	Gear box front cover	1	
7	HB310100	Idler pulley bracket	1	
8	HP310150	Idler shaft	1	
9	HB310080	Idler pulley φ65	1	
10	A9012068	C-Ring (For shaft φ15)	1	
11	HV310100	Gear box cover (L Side)	1	
12	HV310090	Belt cover	1	
13	HV310080	Drivig pulley cover	1	
14	HB310120	Bearing unit (For lower shaft)	1	
15	A9011040	Bearing (RB-204)	1	
16	HB310070	Timing pulley (8M-23)	1	
17	HV310060	Lower shaft (Gear box L)	1	
18	HV310070	Key (Both round) 6×6×47	1	
19	A9020131	Timing belt (25058M760)	1	
20	HB310180	Bridge cover		
21		Truss screw		
22		Truss screw		
23		Hex. socket bolt M12×45		
24		Hex. bolt M5×50		For small bobbin
		Hex. bolt M5×60		For middle bobbin
25		Hex. socket bolt M10×35		
26		Hex. socket bolt M6×20		
27		Truss screw M5×10		
28		Hex. socket bolt M12×40		
29		Hex. socket bolt M10×45		
30		Hex. socket set screw M6×6		
31		Hex. socket bolt M6×12		Key side
		Hex. socket bolt M6×15		
32		Hex. socket flange bolt M8×25		

(IE)L.100

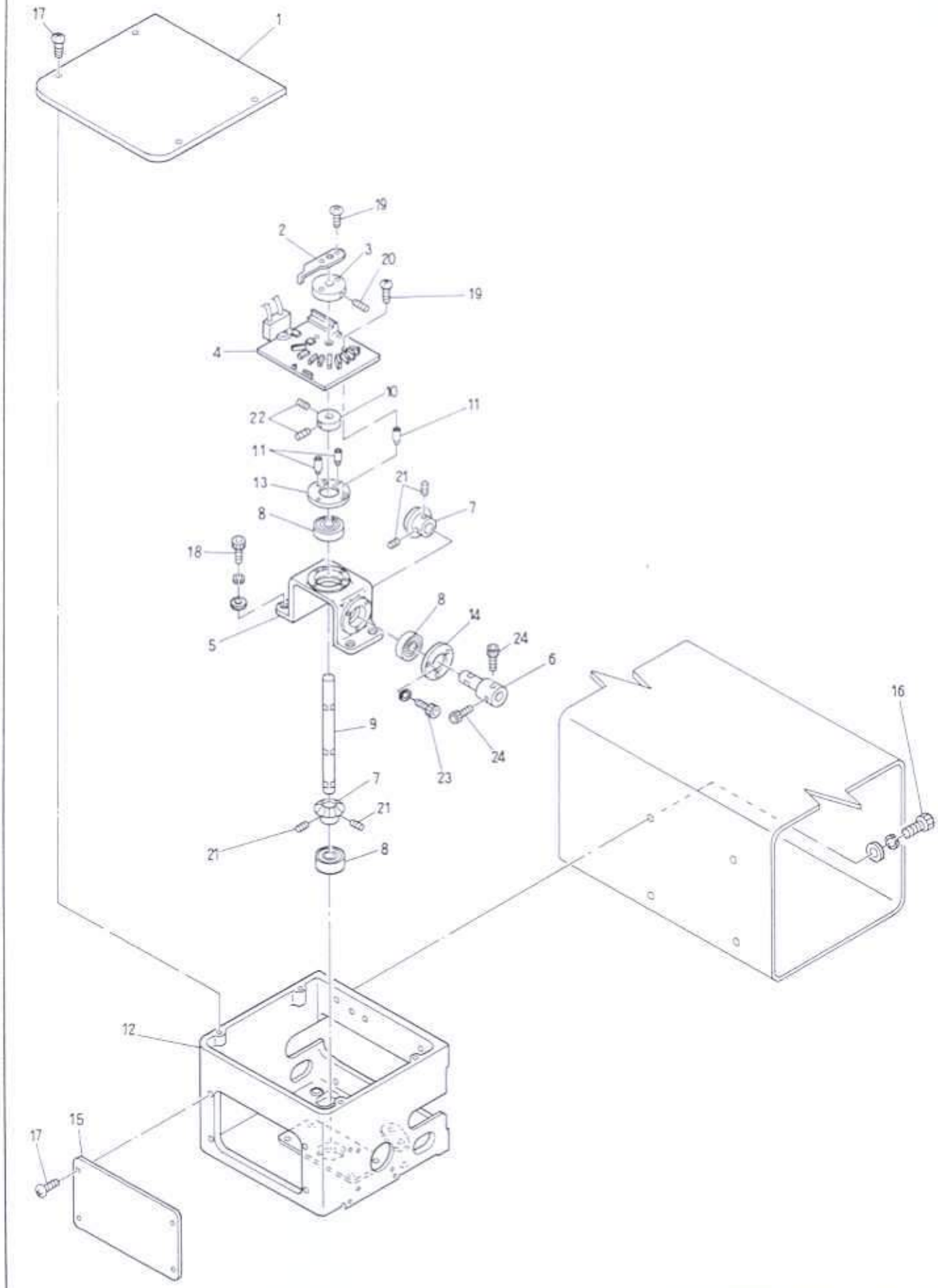
17
1
19
2
3
20
19
4
10
22
11
11
13
21
8
7
18
5
8
14
24
6
16
9
23
24
7
21
21
8
12
15
17

⑰ Color change mechanism I

ITEM	LIST No	DESCRIPTION	Q'TY	REMARK
1	HB330140	Turning control box upper cover	1	
2	KC330280	Needle bar detection plate	1	
3	KC330170	Detection plate collar	1	
4	EBY01120	3760 Needle positioner	1	
5	HB330020	Turning driving base	1	
6	HB330170	Geard motor shaft (For 6RH-180)	1	
7	HB330130	Miter bevel gear	2	
8	A9010001	Bearing (6000ZZ)	3	
9	HB330111	Needle turning shaft	1	
10	HB330221	Set collar	1	
11	HB330211	Needle board spacer	3	
12	HB330010	Turning control box	1	
13	HB330200	Bearing fixing(2)	1	
14	HB330190	Bearing fixing(1)	1	
15	HB330150	Turning control box front cover	1	
16		Hex. socket bolt M6 ×25		
17		Truss screw M4 ×8		
18		Hex. socket bolt M5 ×18		
19		Truss screw M3 ×20		
20		Hex. socket set screw M5 ×10		
21		Hex. socket set screw M5 ×8 (With adhesion)		
22		Hex. socket set screw M4 ×5		
23		Hex. socket bolt M3 ×12		
24		Hex. socket bolt M4 ×8		

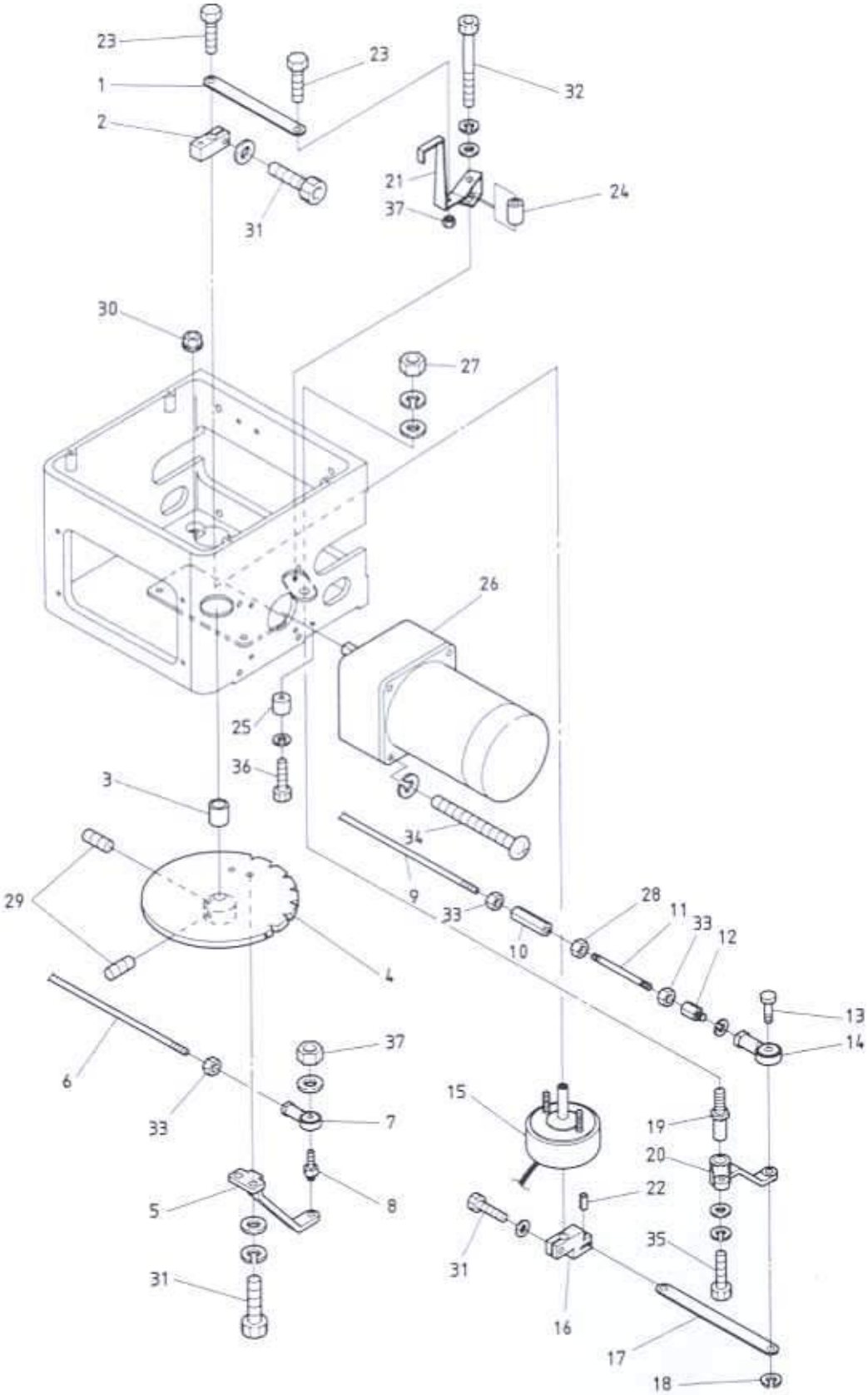
23
23
1
2
32
21
37
24
31
30
27
26
25
36
3
34
9
33
28
11
33
12
10
29
4
13
14
37
6
33
7
15
19
20
22
5
8
35
31
31
16
17
18

⑱ Color change mechanism Ⅱ

ITEM	LIST No.	DESCRIPTION	QTY	REMARK
1	HB330090	Lock detection plate lever (Driving plate)	1	
2	HB330070	Lock detection plate lever (Driving plate)	1	
3	HB330120	Positing collar	1	
4	HT330001	Control turning plate	1	
5	HB330040	Turning rotary plate lever	1	
6	KC330310300	Rotary plate connecing rod (L=250)	1	
7	A9012001	Uniball joint (RD4020R)	1	
8	HP331660	Rotary plate Joint pin	1	
9	KC330410	Lock connecting rod L=2000	2	
10	HH330770	Hex. Connecting bar	1	
11	KC330420	Lock connecting stud bolt	1	
12	HP331610	Hex. connecting bar	1	
13	HP331560	Lock lever pin	1	
14	A9012002	Uniball joint (PR-6)	1	
15	A9056011	Rotary solenoid (6SR25-27×3, 4, 9)	1	
16	HB330060	Lock solenoid lever	1	
17	HB330080	Link lock lever	1	
18	A9012055	E-Ring (φ4)	1	
19	KF230630	Lock lever shaft	1	
20	HB330050	Turning lock lever	1	
21	HB330101	Lock detection lever	1	
22	A9012143	Spring pin φ6×12	1	
23	HP331700	Lock detection plate lever pin	2	
24	HP331950	Lock detection plate rotary shaft	1	
25	HH330670	Stopper eccentric	1	
26	HH330810	Geard motor (RM-F6A5PC3-AS-180)	1	
27		Hex. nut M8		
28		Hex. nut M5 (Left screw)		
29		Hex. socket set screw M5×8 (With adhesion)		
30		Flange nut M5		
31		Hex. socket bolt M5×15		
32		Hex. socket bolt M4×30		
33		Hex. nut M5		
34		Pan screw M4 ×60		
35		Hex. socket bolt M5×10		
36		Hex. socket bolt M4×25		
37		Hex. nut M4		

⑲ Pantograph drive mechanism I
(Pantograph・Guide cover)

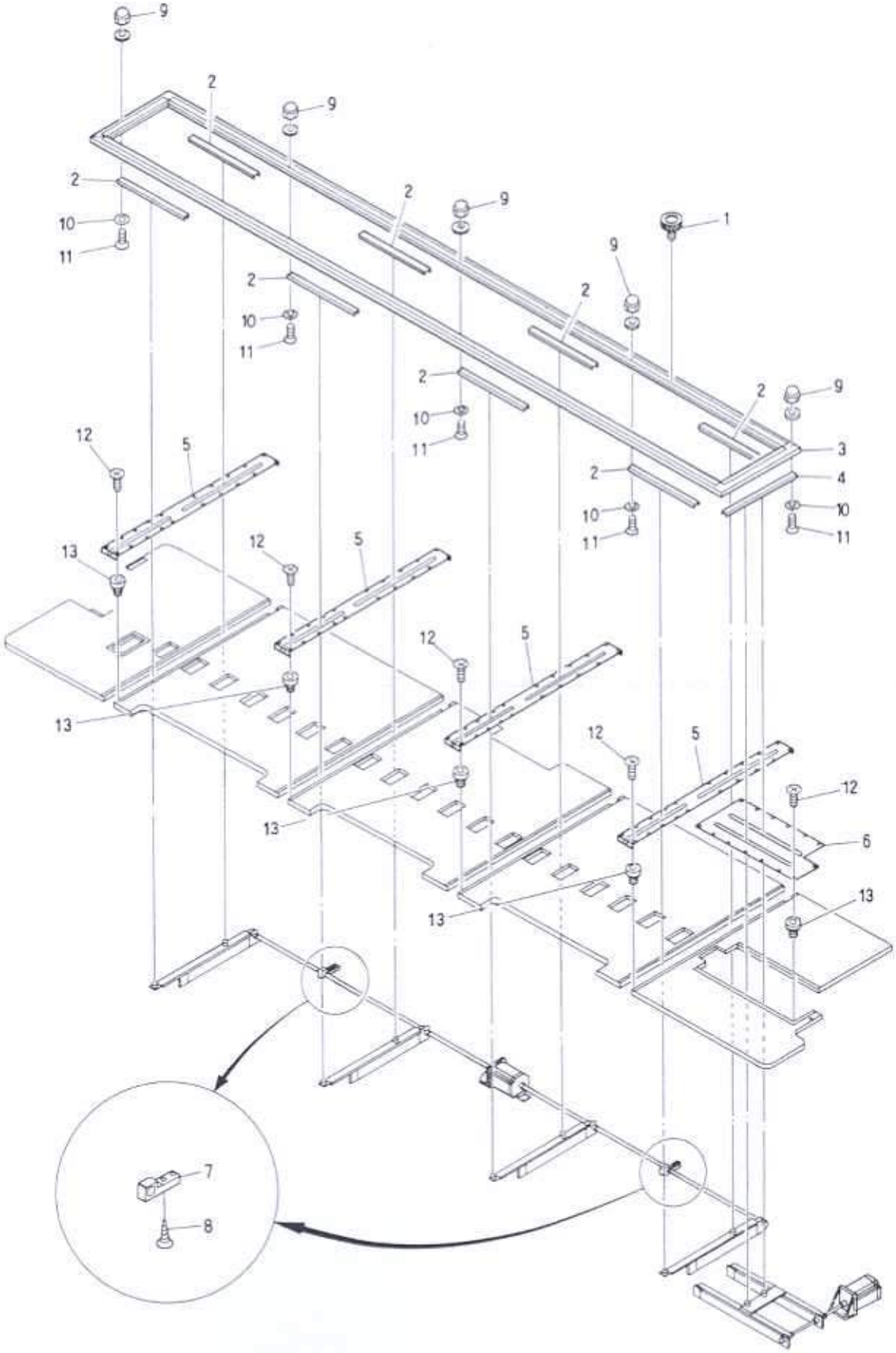

⑲ Pantograph drive mechanism I (Pantograph · Guide cover)

ITEM	LIST No.	DESCRIPTION	Q'TY	REMARK
1	KF730790	Knurling screw (for pantograph)		
2		Guide rail (560L)	8	
3	IFM20240530450	Pantograph frame (MSH-20 450×240/530)	1	
4		Guide rail (610L)	1	
5	HP48290G45	H-guide cover (Stroke 450)	4	
6	HV48221G530	V-guide cover (Stroke 530)	1	
7	HV480070	Pulse motor connecting shaft holder set	2	
8		Pias biss 5×23		
9		Cap nut M4		
10		Washer (With gear) 4		
11		Flush screw M4×12		
12		Flush screw M4×8 (Undercut)		
13		Rag nut (C) M4		

⑳ Pantograph drive mechanism II
(H-Direction・Front)

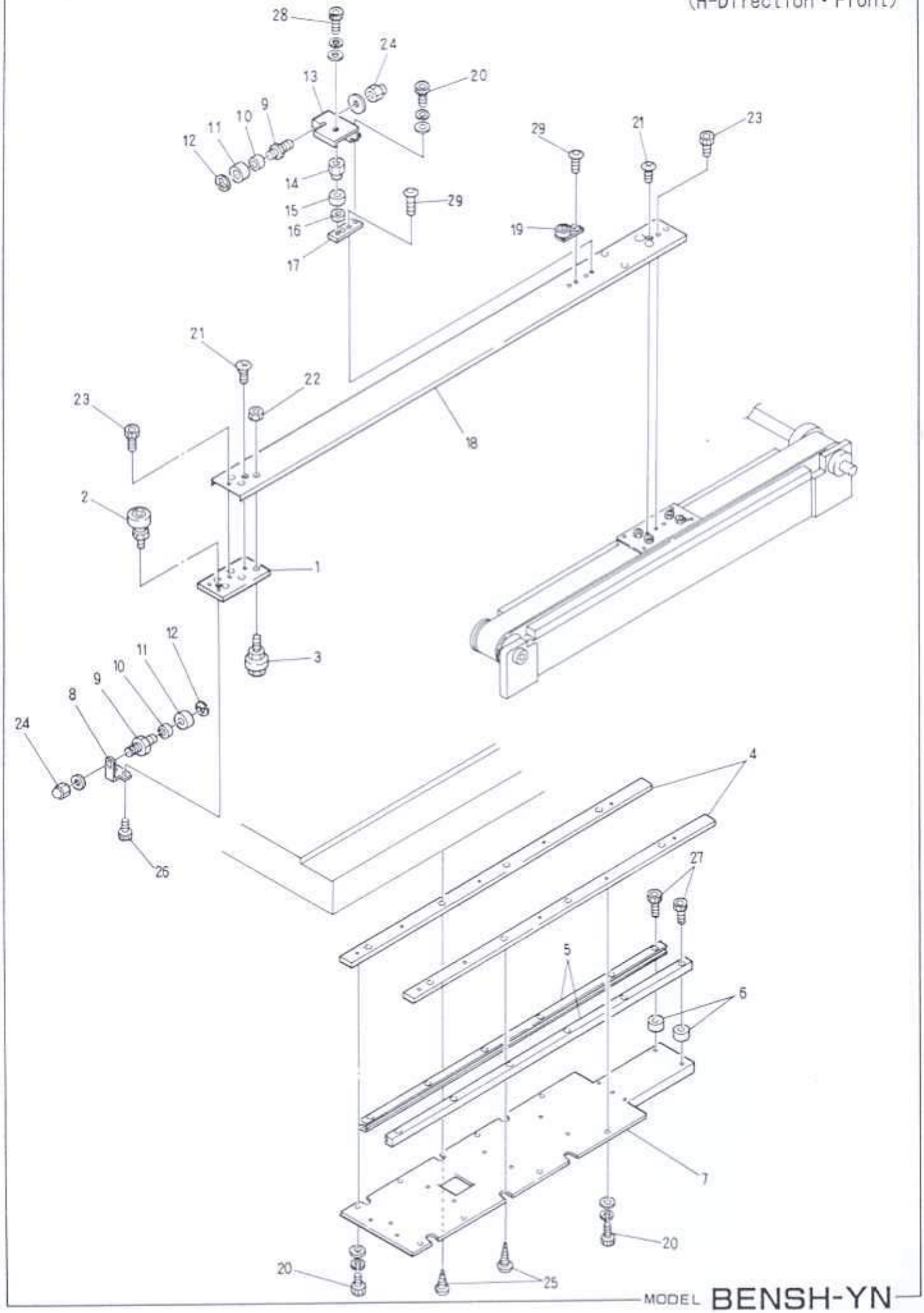

MODEL BENSH-YN

⑳ Pantograph drive mechanismⅡ (H-Direction・Front) (※Change the LIST № by machine type) (R=H-Rail Q'TY)

ITEM	LIST №	DESCRIPTION	Q'TY	REMARK
1	HP482881	H-Roller base (Front)	R×1	
2	HP483370	Guide bearing pin a'ssy	R×1	
3	HP482950	Roller pin a'ssy A	R×3	
4	HP48282045	H-Guide rail base fixing plate (For 450)	R×2	✣
5	HP482910	V-Guide rail (L=1060)	R×2	
6	HP482921	Rail spacer (Front side)	R×16	
7	HP48281A45	H-Center guige rail base (For H450)	R×1	✣
8	HP460121	H-Pantograph stopper (Front)	R×1	
9	HP460170	Pantograph stopper pin	R×2	
10	A9012126	KB-Bush (KBB-0406-D)	R×2	
11	HP460160	Pantograph stopper collar	R×2	
12	A9012127	E-Ring (φ3)	R×2	
13	HP482250	H-Auxiliary roller fixing bracket	R×1	
14	HP482270	H-Auxiliary roller adjusting collar	R×1	
15	HP482590	H-Auxiliary roller	R×1	
16	HP482260	H-Auxiliary roller fixing collar	R×1	
17	HP482280	H-Auxiliary roller fixing base	R×1	
18	HP48313G45	H-Member connecting channel (H450)	R×1	✣
19	HP483391	Guide bearing pin a'ssy (H)	R×1	
20		Hex. socket bolt M5×10		
21		Flush screw M4×8 (Undercut)		
22		Hex. nut M5		
23		Hex. socket bolt M4×8		
24		Cap nut M4		
25		Wood screw 5.1×25		
26		Hex. socket bolt M4×8		
27		Hex. socket bolt M4×15		
28		Hex. socket bolt M5×30		
29		Hex. socket button bolt M4×6		

㉑ Pantograph drive mechanism Ⅲ (H-Direction・Rear)

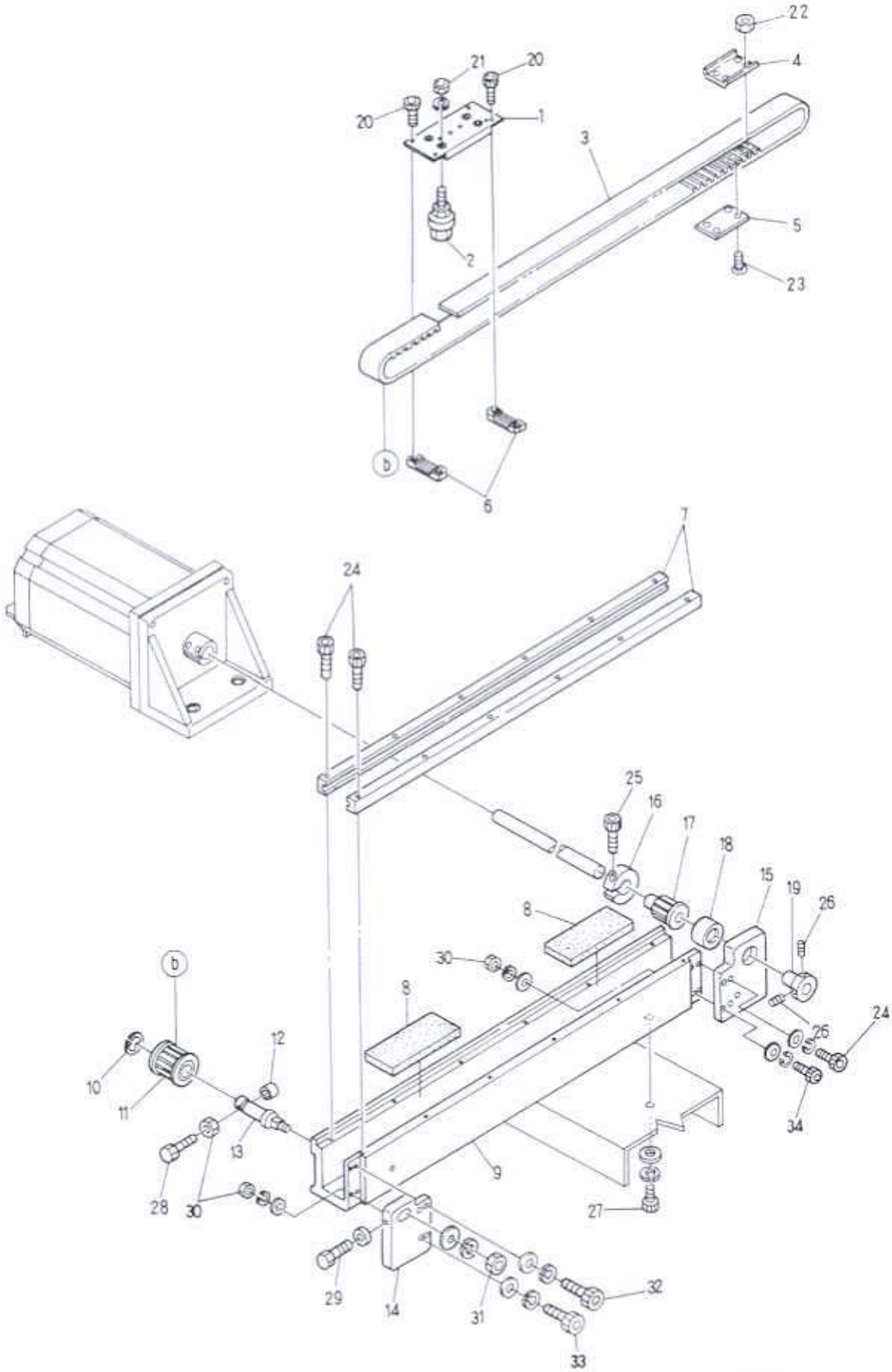

MODEL BENSH-YN

㉑ Pantograph drive mechanismⅢ (H-Direction · Rear)(※Change the LIST No. by machine type)(R=H-Rail Q'TY)

ITEM	LIST No.	DESCRIPTION	Q'TY	REMARK
1	HP482871	H-Roller base (Rear)	R×1	
2	HP482950	Roller pin a'ssy A	R×4	
3	A9020098	Timing belt (300S5M2000)	R×1	
4	HH482031	Belt connecting plate No1	R×1	H-Stroke 850 over
5	HH482041	Belt connecting plate No2	R×1	H-Stroke 850 over
6	HP482940	Timing belt set rack (5M)	R×2	
7	HP482910	V-Guide rail (L=1060)	R×2	
8	KN480061	Rail base felt (100×38×6)	R×2	
9	HH48209G45	H-Guide rail base (Stroke 450)	R×1	※
10	A9012052	E-Ring φ10	R×1	
11	HV480050	Pantograph driving pulley (Front) S5M	R×1	
12	HH482110	Pulley shaft bolt cap	R×1	
13	HH481991	Timing pully shaft	R×1	
14	HH482000	H-Guide front pulley bracket	R×1	
15	HV480030	H-Guide rear pulley bracket	R×1	
16	HH481980	Clamping φ19	R×1	
17	HV480040	Pantograph driving pully (Rear) S5M	R×1	
18	A9011063	Needle bearing (TLA 2016)	R×1	
19	HH481970	Pulse motor connecting shaft collar	R×1	
20		Hex. socket bolt M3×6		
21		Hex. nut M5		
22		Hex. nut M3		
23		Truss screw M3×10		
24		Hex. socket bolt M4×15		
25		Hex. socket bolt M5×18		
26		Hex. socket set screw M5×8		
27		Hex. socket bolt M8×25		
28		Hex. bolt M4×35		
29		Hex. bolt M4×25		
30		Hex. nut M4		
31		Hex. nut M8		
32		Hex. socket bolt M4×18		
33		Hex. socket bolt M4×22		
34		Hex. socket bolt M4×20		

(IE)1.100

㉒ Pantograph drive mechanismⅣ (H-Direction・Drive)

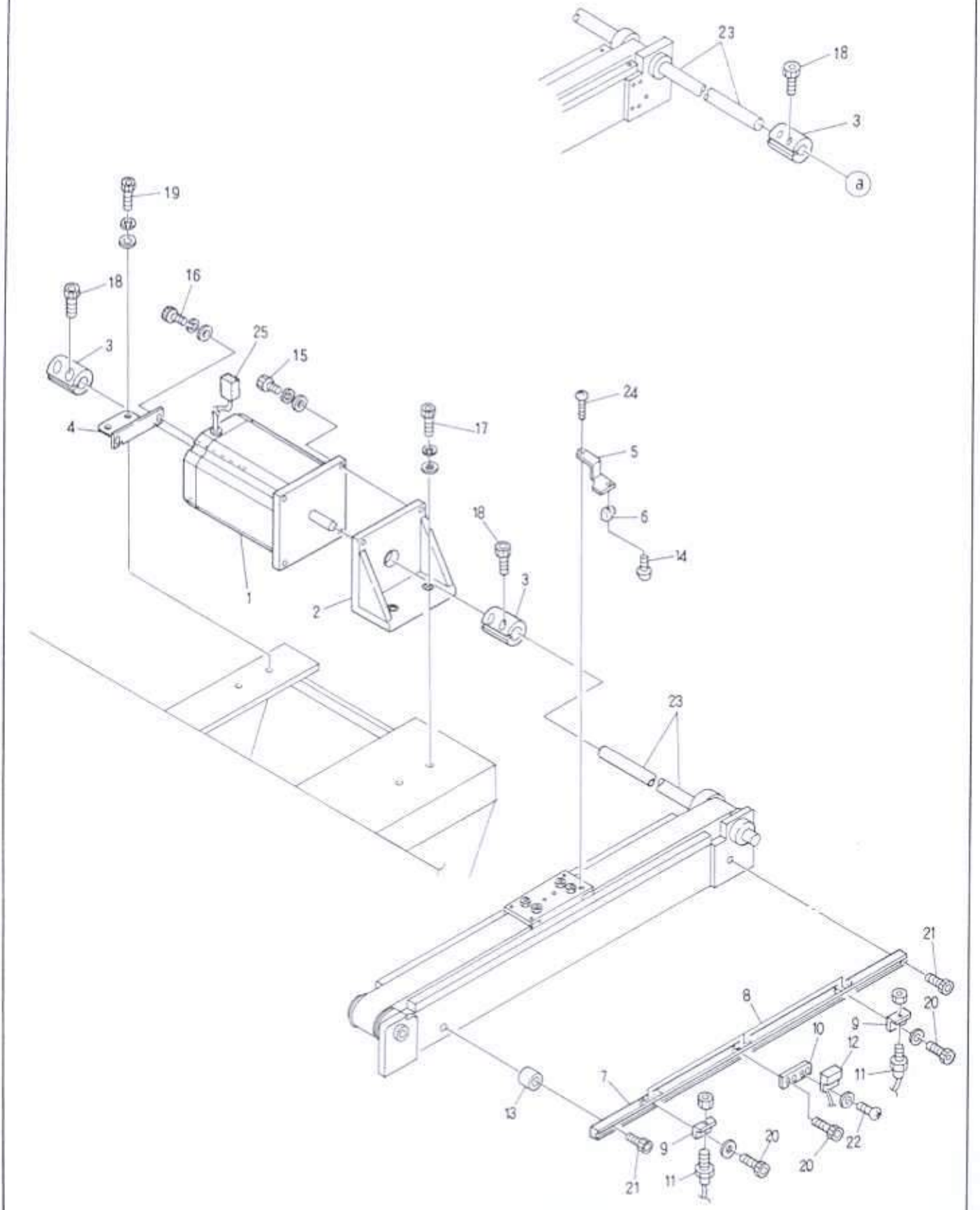

㉒ Pantograph drive mechanismⅣ (H-Direction · Drive)(※Change the LIST No. by machine type)

ITEM	LIST No.	DESCRIPTION	Q'TY	REMARK
1	HV480060	Pulse motor (TS3650N2)	2	
2	HV480010	H-Pulse motor bracket	1	
3	HH481931	Pulse motor coupling	2	
4	HV480020	H-Pulse motor auxiliary bracket	1	
5	HP451080	H-Pantograph origin point magnet bracket	1	
6	A9052030	Magnet (M-102A-02)	1	
7	HP45111G45	H-Pantograph origin rail (Stroke 450)	1	※
8	KU460270	Plate nut (M3)	3	
9	MT460240	RS-001 Bracket	2	
10	KN450300	MH-601A Proximity switch fixing bracket	1	
11	A9052024	Switch (RS-001)	2	
12	A9052031	Magnet proximity switch (MH-601A)	1	
13	A9012219	Spacer (Coil bush) 8 ×7	1	
14		Truss screw M3×6		
15		Hex. socket bolt M6×22		
16		Hex. socket bolt		
17		Hex. socket bolt M8×30		
18		Hex. socket bolt M5×18		
19		Hex. socket bolt		
20		Hex. socket bolt M3×8		
21		Hex. socket bolt M4×15		
22		Truss screw M3×10		
23		H-Pulse motor connecting shaft	1	
24		Truss screw M3×4		
25	HV510020	H-Pulse motor extension cable L=1500	1	※

(IE)1.100

Barudan

㉓ Pantograph drive mechanism V
(V-Direction・Two railes
and LM guide use)

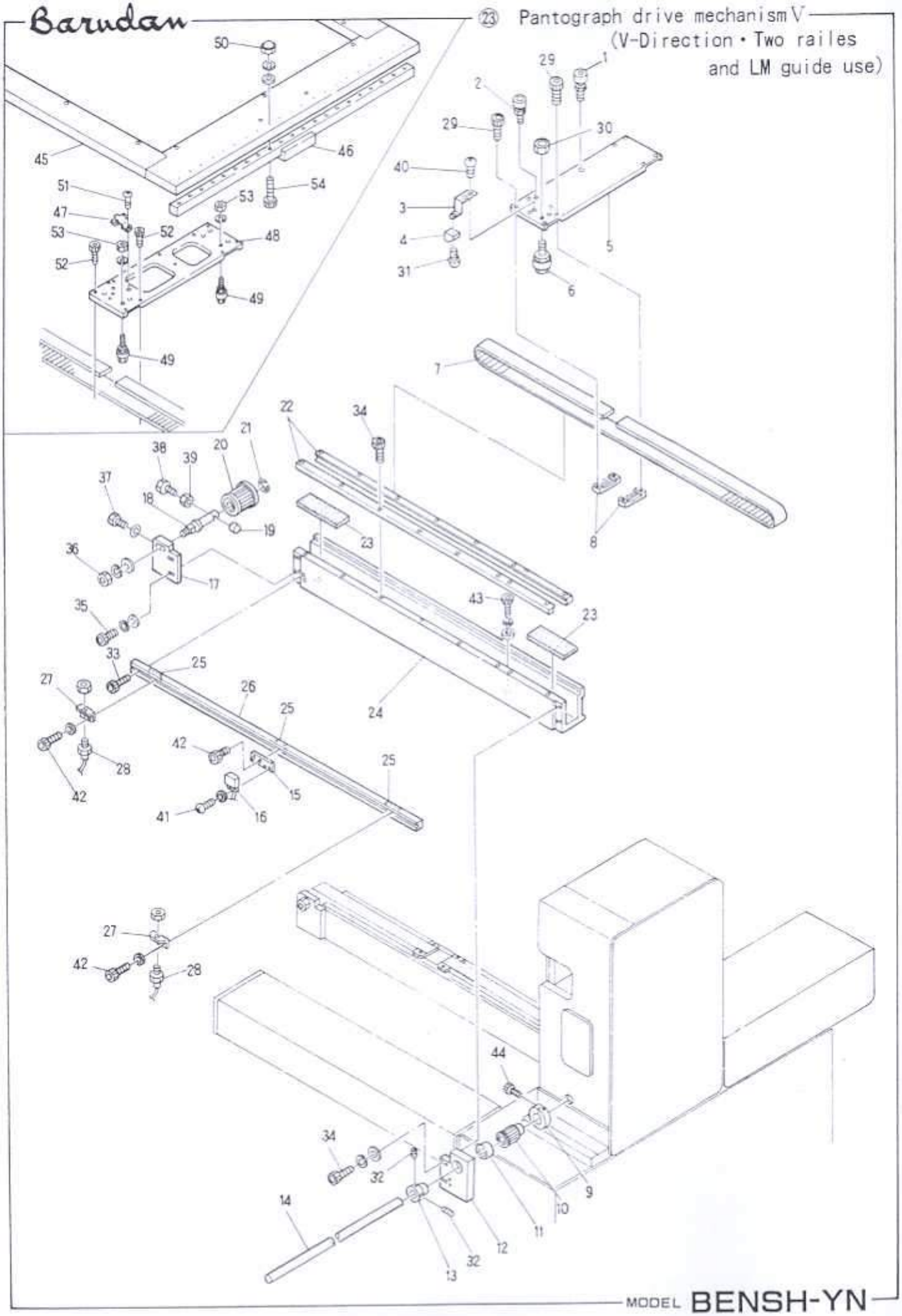

MODEL BENSH-YN

㉒ Pantograph drive mechanismⅣ (H-Direction · Drive)(※Change the LIST No. by machine type)

ITEM	LIST No.	DESCRIPTION	Q'TY	REMARK
1	HV480060	Pulse motor (TS3650N2)	2	
2	HV480010	H-Pulse motor bracket	1	
3	HH481931	Pulse motor coupling	2	
4	HV480020	H-Pulse motor auxiliary bracket	1	
5	HP451080	H-Pantograph origin point magnet bracket	1	
6	A9052030	Magnet (M-102A-02)	1	
7	HP45111G45	H-Pantograph origin rail (Stroke 450)	1	※
8	KU460270	Plate nut (M3)	3	
9	MT460240	RS-001 Bracket	2	
10	KN450300	MH-601A Proximity switch fixing bracket	1	
11	A9052024	Switch (RS-001)	2	
12	A9052031	Magnet proximity switch (MH-601A)	1	
13	A9012219	Spacer (Coil bush) 8 ×7	1	
14		Truss screw M3×6		
15		Hex. socket bolt M6×22		
16		Hex. socket bolt		
17		Hex. socket bolt M8×30		
18		Hex. socket bolt M5×18		
19		Hex. socket bolt		
20		Hex. socket bolt M3×8		
21		Hex. socket bolt M4×15		
22		Truss screw M3×10		
23		H-Pulse motor connecting shaft	1	
24		Truss screw M3×4		
25	HV510020	H-Pulse motor extension cable L=1500	1	※

(IE)1.100

㉓ Pantograph drive mechanism V
(V-Direction・Two railes and LM guide use)

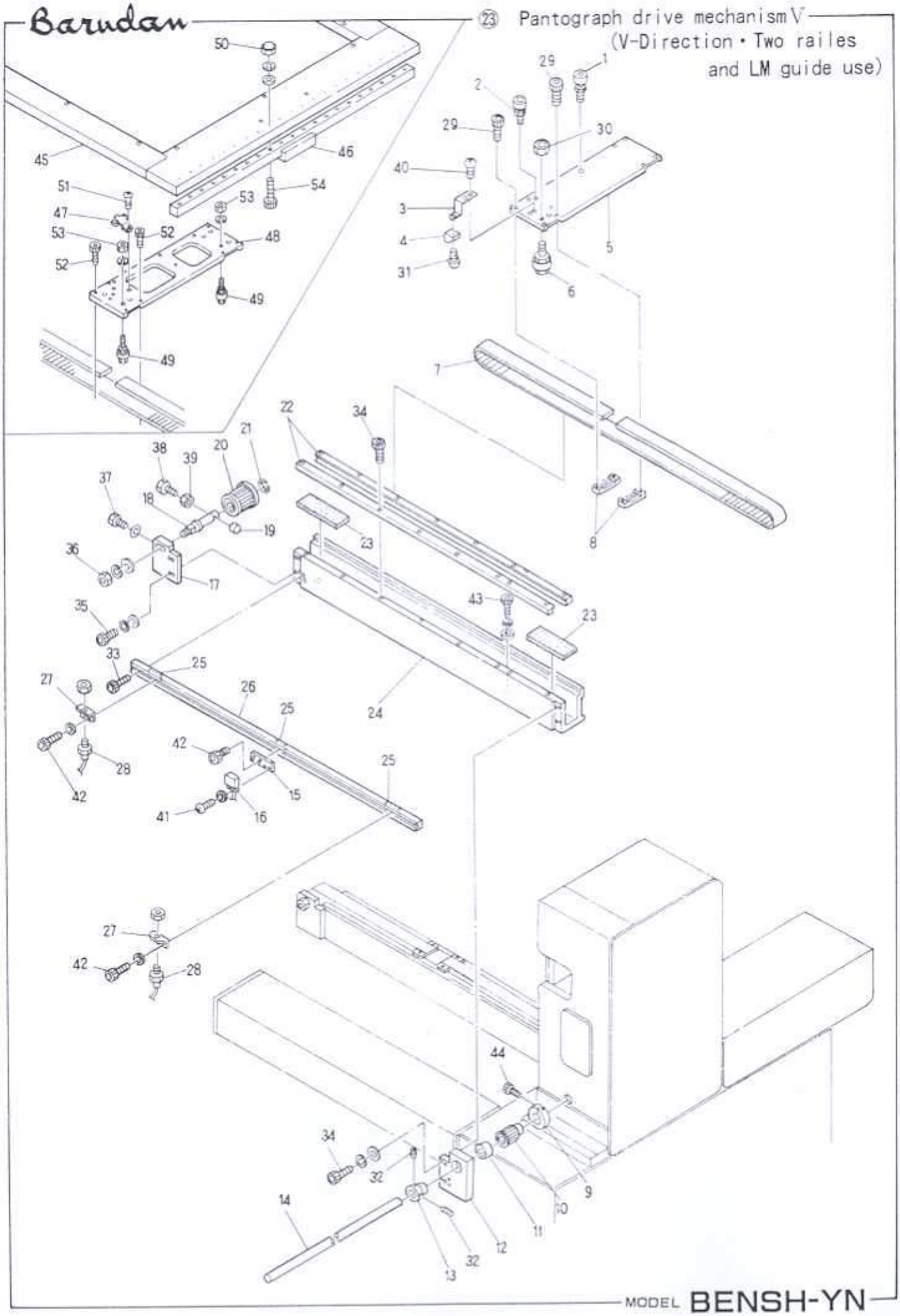

㉓ Pantograph drive mechanism Ⅴ (V-Direction・Two railes and LM guide use)

(※Change the LIST № by machine type)

ITEM	LIST №	DESCRIPTION	Q'TY	REMARK
46		LM Guide (L=630)	1	LM guide use
47	HS460100	V Pantograph driving raile fixing bracket	1	LM guide use
48	HS480020	V Roller base (LM guide)	1	LM guide use
49	HP482950	Roller pin a'ssy A	1	LM guide use
50		Cap nut M3	8	LM guide use
51		Hex. socket button bolt M4 ×6		LM guide use
52		Hex. socket bolt M3 ×6		LM guide use
53		Hex. nut M5		LM guide use
54		Hex. socket bolt M3 ×8		LM guide use

Barudan

㉓ Pantograph drive mechanism V (V-Direction・Three railes)

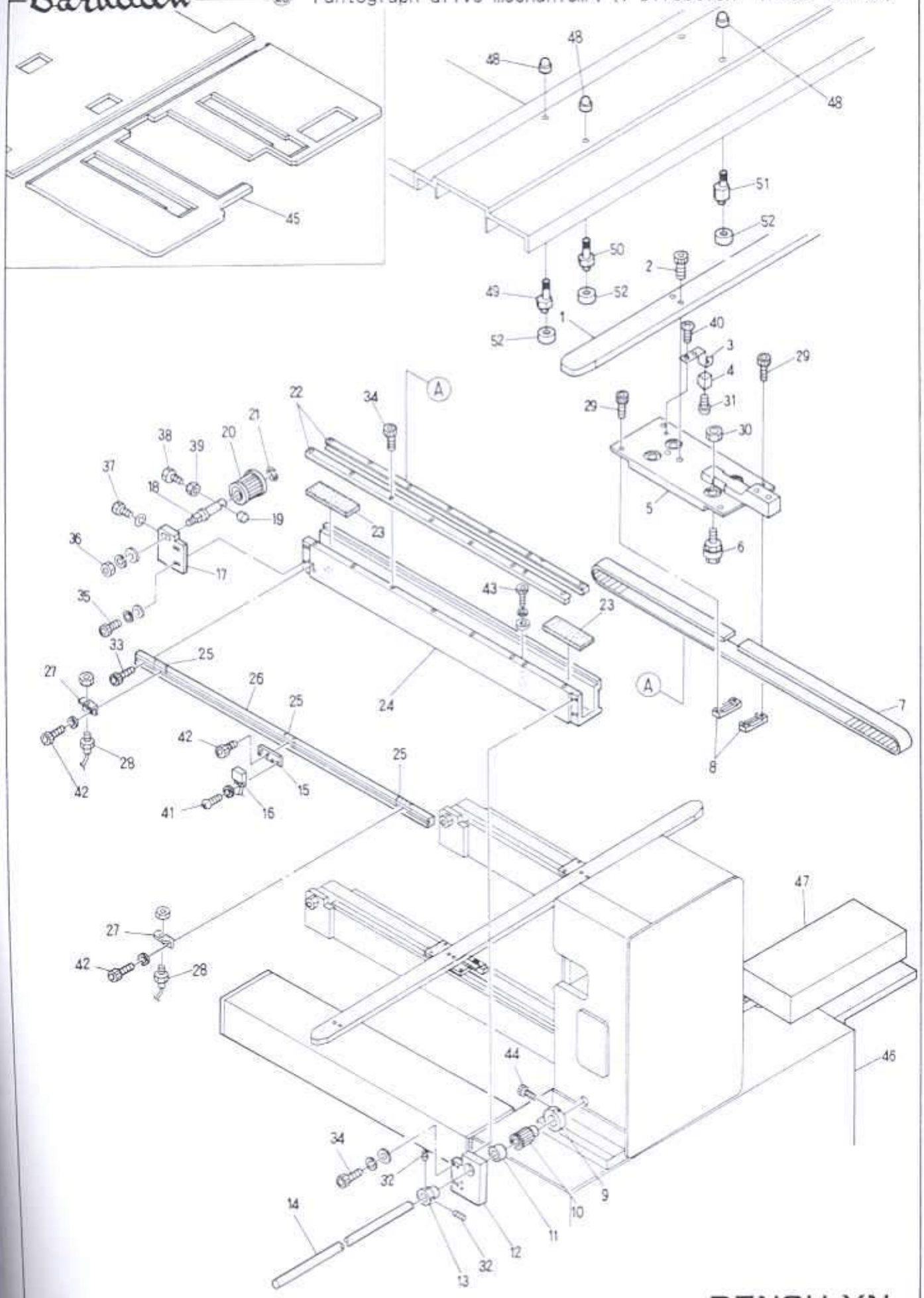

MODEL BENSH-YN

㉓ Pantograph drive mechanismV (V-Direction・Two railes and LM guide use)

ITEM	LIST No.	DESCRIPTION	Q'TY	REMARK
1	HP483111	Guide bearing pin a'ssy (B)	1	
2	HP483370	Guide bearing pin a'ssy	1	
3	HP451100	V-Pantograph origin point magnet bracket	1	
4	A9052030	Magnet (M-102A-02)	1	
5	HP482892	V-Roller base	1	
6	HP482950	Roller pin a'ssy A	8	
7	A9020098	Timing belt (300S5M2000)	2	
8	HP482940	Timing belt set rack (5M)	4	
9	HH481980	Clamping φ19	2	
10	HV480040	Pantograph driving pulley (Rear) (S5M)	2	
11	A9011063	Needle bearing (TLA2016)	2	
12	HV480030	H-Guide rear pulley bracket	2	
13	HH481970	Pulse motor connecting shaft collar	2	
14	HV480080	V-Pulse motor connecting shaft (For 2 railes)	1	
15	KN450300	MH-601A Proximity switch fixing bracket	1	
16	A9052031	Magnetic proximity switch (MH-601A)	1	
17	HH482000	H-Guide front pulley bracket	1	
18	HH481991	Timing pulley shaft	2	
19	HH482110	Pulley shaft bolt cap	2	
20	HV480050	Pantograph driving pulley (Front) (S5M)	2	
21	A9012052	E-Ring (φ10)	2	
22	HP482910	V-Guide rail (L-1060)	4	
23	KN480061	Rail base felt (100×38×6)	4	
24	HP48217G530	V-Guide rail base (Stroke 530)	2	※
25	KU460270	Plate nut (M3)	3	
26	HP45112G530	V-Pantograph origin point rail (For V530)	1	※
27	MT460240	RS-001 Bracket (V side)	2	
28	A9052024	Switch (RS-001)	2	
29		Hex. socket bolt M3×6		
30		Hex. nut M5		
31		Truss screw M3×6		
32		Hex. socket set screw M5×8		
33		Hex. socket bolt M4×8		
34		Hex. socket bolt M4×15		
35		Hex. socket bolt M4×18		
36		Hex. nut M8		
37		Hex. bolt M4×25		
38		Hex. bolt M4×35		
39		Hex. nut M4		
40		Flush screw M4×8 (Undercut)		
41		Truss screw M3×10		
42		Hex. socket bolt M3×8		
43		Hex. socket bolt M8×25		
44		Hex. socket bolt M5×18		
45	1FM1538038045H	Pantograph frame a'ssy (BEMSH-YS-15 450×380/380)	1	※LM guide use

㉓ Pantograph drive mechanism V (V-Direction · Three railes) (※Change the LIST No. by machine type)

ITEM	LIST No.	DESCRIPTION	Q'TY	REMARK
1	HV480110	V-Slide raile	1	
2		Hex. Socket bolt M5×15		
3	HP451100	V-Pantograph origin point magnet bracket	1	
4	A9052030	Magnet (M-102A-02)	1	
5	HP483341	V Roller base	3	
6	HP482950	Roller pin a'ssy A	8	
7	A9020098	Timing belt (300S5M2000)	2	
8	HP482940	Timing belt set rack (5M)	4	
9	HH481980	Clamping φ19	2	
10	HV480040	Pantograph driving pulley (Rear) (S5M)	2	
11	A9011063	Needle bearing (TLA2016)	2	
12	HV480030	H-Guide rear pulley bracket	2	
13	HH481970	Pulse motor connecting shaft collar	2	
14	HV480090	V-Pulse motor connecting shaft (V3 railes)	1	
15	KN450300	MH-601A Proximity switch fixing bracket	1	
16	A9052031	Magnetic proximity switch (MH-601A)	1	
17	HH482000	H-Guide front pulley bracket	1	
18	HH481991	Timing pulley shaft	2	
19	HH482110	Pulley shaft bolt cap	2	
20	HV480050	Pantograph driving pulley (Front) (S5M)	2	
21	A9012052	E-Ring (φ10)	2	
22	HP482910	V-Guide rail (L=1060)	4	
23	KN480061	Rail base felt (100×38×6)	4	
24	HP48217G530	V-Guide rail base (Stroke 530)	2	✣
25	KU460270	Plate nut (M3)	3	
26	HP45112G530	V-Pantograph origin point rail (For V530)	1	✣
27	MT460240	RS-001 Bracket (V side)	2	
28	A9052024	Switch (RS-001)	2	
29		Hex. socket bolt M3×6		
30		Hex. nut M5		
31		Truss screw M3×6		
32		Hex. socket set screw M3×8		
33		Hex. socket bolt M4×8		
34		Hex. socket bolt M4×15		
35		Hex. socket bolt M4×18		
36		Hex. nut M8		
37		Hex. bolt M4×25		
38		Hex. bolt M4×35		
39		Hex. nut M4		
40		Flush screw M3×8 (Undercut)		
41		Truss screw M3×10		
42		Hex. socket bolt M3×8		
43		Hex. socket bolt M8×25		
44		Hex. socket bolt M5×18		
45	IDHV2030035060H	Table (For V3 railes)	1	

㉓ Pantograph drive mechanismⅤ (V-Direction · Three railes)

ITEM	LIST No	DESCRIPTION	Q'TY	REMARK
46	1AHV2030035060H	Rag frame (For V3 railes)	1	
47	HV310160	Pulse motor cover (For V3 railes)	1	
48		Cap nut M4		
49	HW480080	Guide bearing shaft No4	2	
50	HW480070	Guide bearing shaft No3	2	
51	HW480050	Guide bearing shaft No1	8	
52		Minia chair ball pillow block WBC5-1322A		

㉔ Pantograph drive mechanismⅥ
(V-Direction・Drive)

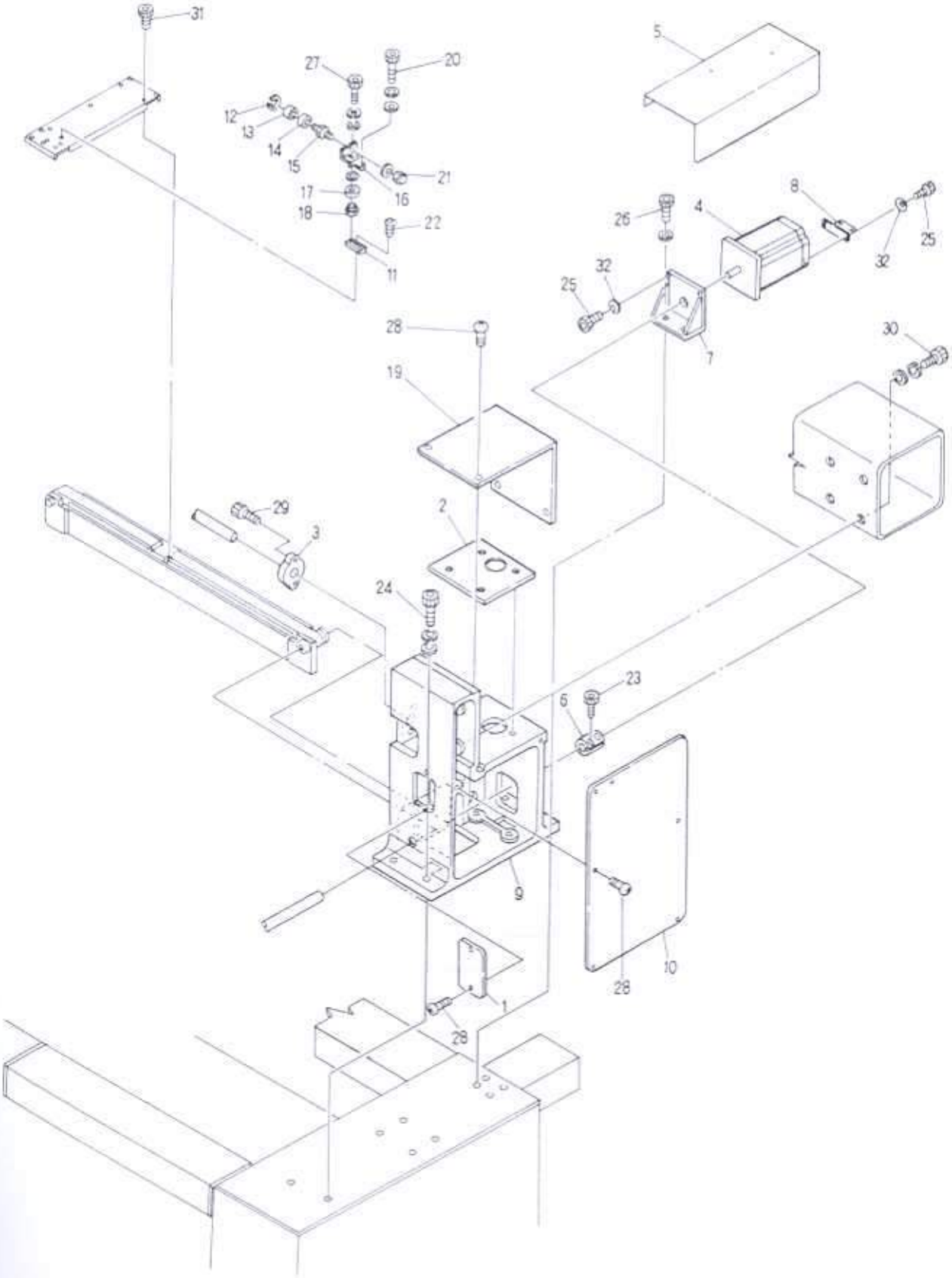

㉔ Pantograph drive mechanismVI (V-Direction · Drive)

ITEM	LIST No.	DESCRIPTION	Q'TY	REMARK
1	HB310160	Gear box front cover	1	
2	HB130020	Bridge fixing spacer T=1	1	
	HB130030	Bridge fixing spacer T=0.5	1	
3	HP321140	Top shaft connecting bearing unit (SBFLN02)	1	
4	HV480060	Pulse motor (TS3650N2)	1	
5	HV310130	Pulse motor cover (V side) (2-Railes)	1	
6	HH481931	Pulse motor coupling (2-Railes)	1	
7	HV480010	H-Pulse motor bracket	1	
8	HV480020	H-Pulse motor auxiliary bracket	1	
9	HV310010	Gear box (R)	1	
10	HB310030	Gear box cover (R)	1	
11	HP482570	V-Auxiliary roller fixing base	1	
12	A9012127	E-Ring (φ3)	1	
13	HP460160	Pantograph stop roller	1	
14	A9012126	KB-Bush (KBB-0406-D)	1	
15	HP460170	Pantograph stop pin	1	
16	HP482580	V-Auxiliary roller fixing bracket	1	
17	HP482290	V-Auxiliary roller (28-2280)	1	
18	HP482560	V-Auxiliary roller adjusting collar	1	
19	HB310180	Bridge cover	1	
20		Hex. socket bolt M5×10		
21		Cap nut M4		
22		Hex. socket button bolt M4×6		
23		Hex. socket bolt M5×18		
24		Hex. socket bolt M12×45		
25		Hex. socket bolt M6×22		
26		Hex. socket bolt M8×30		
27		Hex. socket bolt M5×22		
28		Truss screw M5×10		
29		Hex. socket bolt M6×25 (With spring washer)		
30		Hex. socket bolt M12×40		
31		Hex. socket bolt M3×8		
32		Disc spring 6		

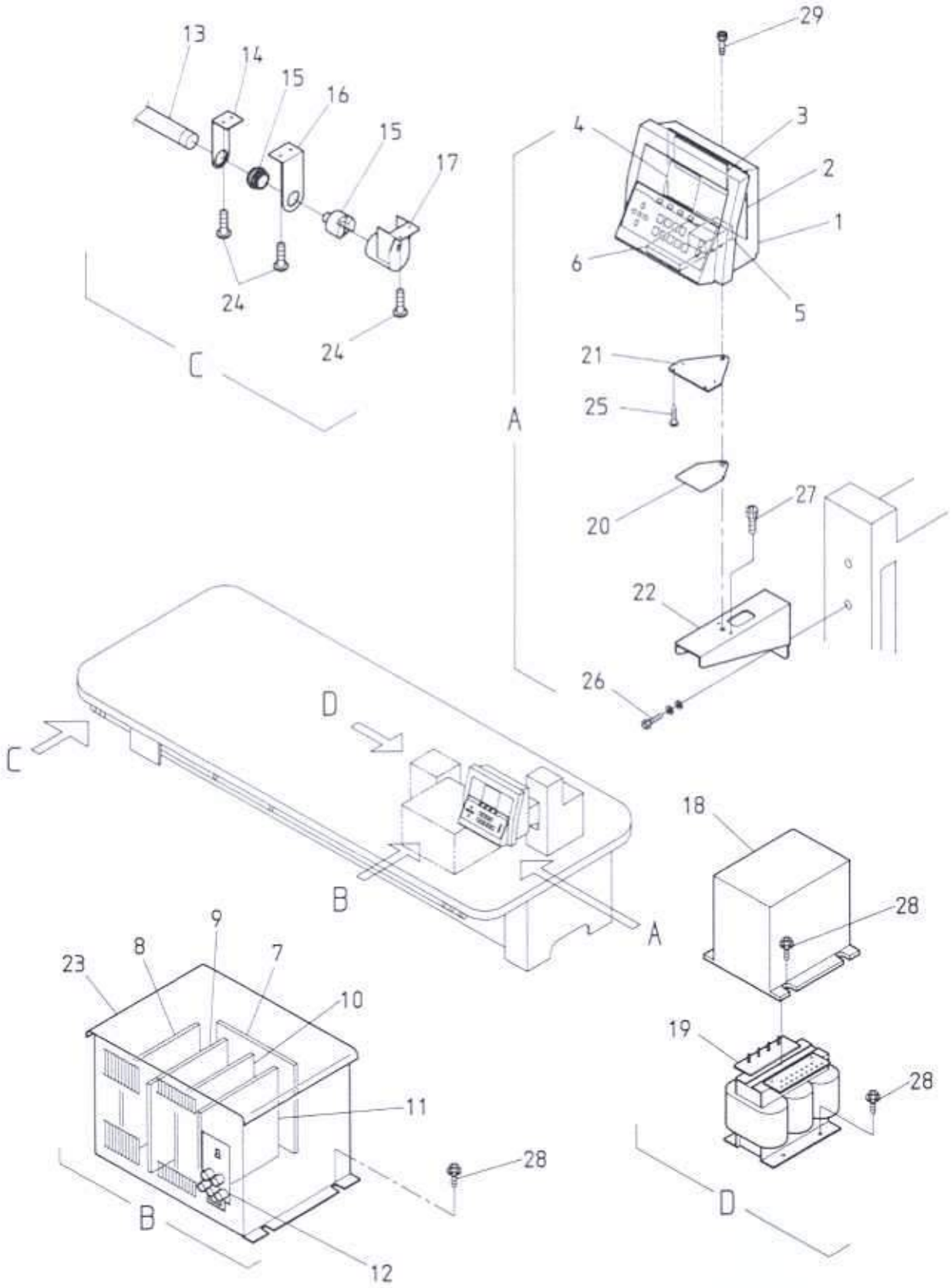
13
14
15
16
15
17
24
24
C
29
4
3
2
1
6
5
21
25
A
20
27
22
26
D
C
B
A
18
28
9
8
7
23
10
19
28
11
28
B
12
D

㉕ Control system

ITEM	LIST No	DESCRIPTION	Q'TY	REMARK
1		Automat controller (BENS)	1	
2	EBY01250	CPU-Board	1	
3	EBY01240	Memory board	1	
4	EBY01260	LCD-Display system	1	
5	EBY01270	Automat power	1	
6	EBY01350	Floppy drive	1	
7	EBY01330	Back board	1	
8	EBY01310	Pulse moter drive unit	1	
9	EBY01340	Inverter unit	1	
10	EBY01300	CPU-Board	1	
11	EBY01320	Power board	1	
12	EBY01290	Power control unit	1	
13	KF5301600	Switch bar	1	
14	KC5302400	Bar switch bracket (Small)	5	
15	KF5301200	Push button switch MS319 (Green)	1	
	KF5301110	Push button switch MS319 (Red)	1	
16	KC5302300	Bar switch bracket (Large)	4	
17	KF5301500	Push button switch cap	1	
18	KC5200200	Transformer cover set	1	
19		Automat transformer 3P (MSH)	1	
		Automat transformer 1P (MSH)	1	
20	HV3300010	Automat bracket	1	
21	HV3300020	Automat bracket spacer	1	
22	HV5100010	Controller stand fixing stay	1	
23		Automat driver	1	
24		Tapping pan screw M4×20		
25		Truss tapping screw 3.5 ×8		
26		Hex. socket bolt M8×20		
27		Hex. socket flange bolt M6×20		
28		Hex. socket flange bolt M6×12		
29		Hex. socket bolt		

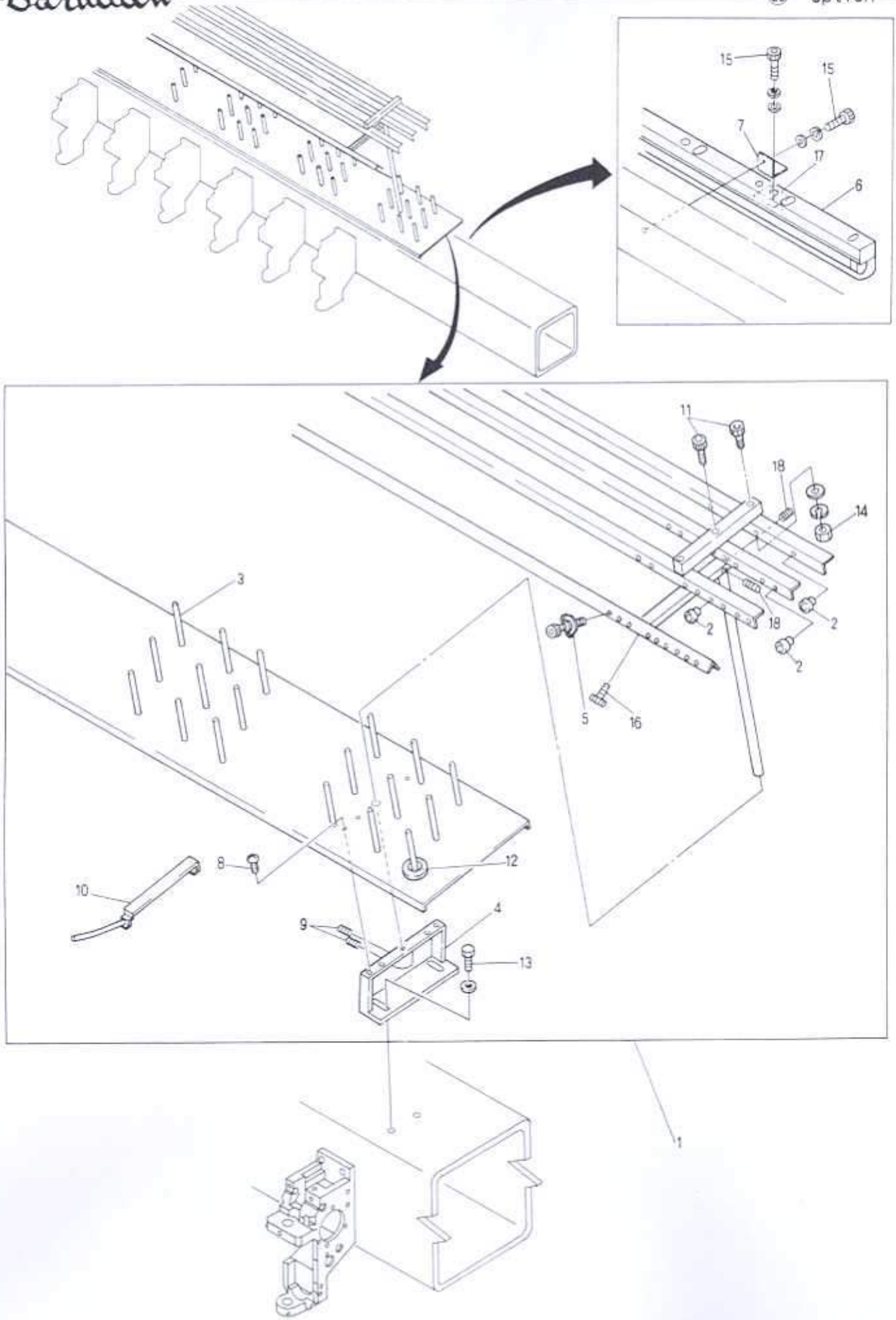
15
15
7
17
6
11
18
14
3
2
18
2
2
5
16
12
8
10
4
9
13
1

㉖ Option

(※Change the LIST № by machine type)

ITEM	LIST №	DESCRIPTION	Q'TY	REMARK
1		Spool holder	1	✣
2	KF240900	Thread guide ceramic (For spool holder)		
3	HT710000	Spool holder pin		
4		Spool holder base	8	
5	HP241430	Second tension unit complete (D=13.5)		
6	LF-90671C	Fluorescent lamp	1	✣
7	HB710010	Fluorescent lamp fixing bracket	2	✣
8		Flush screw M4×12		
9		Hex. socket set screw M4×8		
10		Bobbin stand	3	
11		Hex. socket bolt M5×11		
12	KF710390	Spool holder felt (8×34×φ70)		
13		Hex. bolt M8×20		
14		Hex. nut M5		
15		Hex. socket bolt M8×45		
16		Hex. socket bolt M5×12		
17	HB710020	Fluorescent lamp set plate		
18		Hex. socket set screw		

㉗ Thread guide mechanism
(Lower thread sensorium)

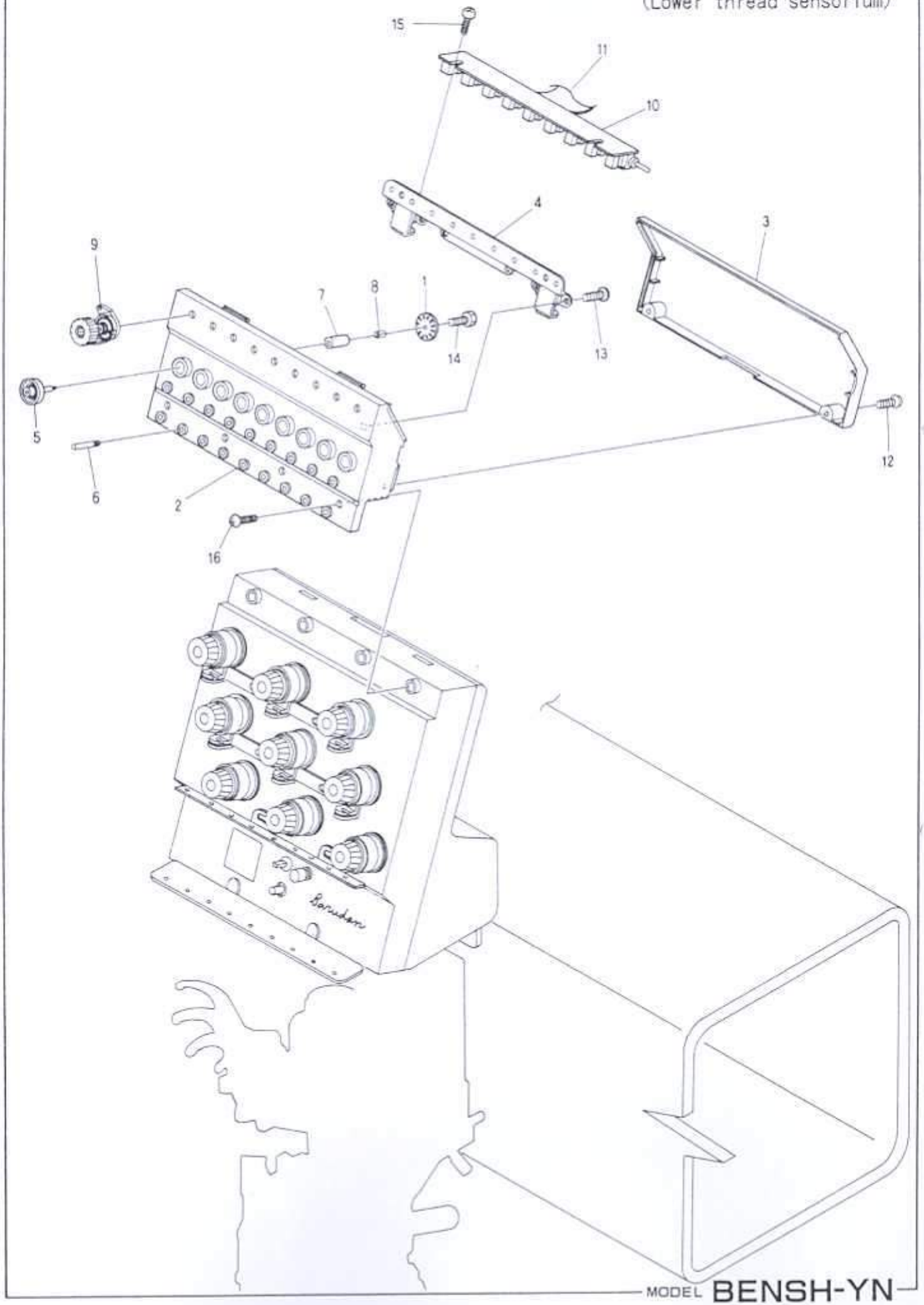

㉗ Thread guide mechanism (Lower thread sensorium)

(H=Head Q'TY)

ITEM	LIST No.	DESCRIPTION	Q'TY	REMARK
1	HT240100	Lower thread sensorium sensor disc (YN)	H×9	
2	HT240250	Lower thread sensorium box case (YN)	H×1	
3	HT240270	Lower thread sensorium box cover (YN)	H×1	
4	HT240280	Lower thread sensorium box base (YN)	H×1	
5	HT240290	Tension wheel	H×9	
6	HT240300	Thread guide pin	H×18	
7	HT240310	Tension wheel bearing	H×9	
8	KN540510	Tension wheel nut	H×9	
9	HT240340	Second tension unit complete	H×9	
10		4690 Lower thread sensorium sensor board	H×1	
11		Sensor cable		
12		Pan screw M3 ×6		
13		Tapping pan screw II 3×8		
14		Hex. socket bolt M2 ×3		
15		Tapping pan screw II 3×12		
16		Truss screw M4 ×10		

(IE)1.100

I N D E X

LIST No.	PAGE No.	ITEM	LIST No.	PAGE No.	ITEM
1AHB2024053045G	3	4	A901222 13	3	5
1AHV2030035060H	49	46	A901221 9	45	13
1BHY3018560045H	3	17	A901236 7	17	27
1CHV2030035060H	49	45	A901236 8	17	17
1EHY3018560045H	3	26	A901304 5	7	26
1FM1538038045H	47	45	A901304 5	16	25
1KHY3018560045H	3	1	A901402 2	5	18
1SHB20240530J	3	7	A901405 1	21	14
A901000 1	35	8	A901405 5	15	16
A901001 7	11	15	A902009 8	43	3
A901010 0	9	4	A902009 8	47	7
A901010 1	9	3	A902009 8	49	7
A901010 2	9	5	A902013 1	33	19
A901102 1	13	5	A902017 1	31	13
A901102 1	15	19	A905200 5	29	14
A901102 2	15	20	A905202 4	45	11
A901102 3	15	18	A905202 4	47	28
A901103 5	33	3	A905202 4	49	28
A901104 0	31	4	A905202 8	25	10
A901104 0	33	15	A905203 0	45	6
A901106 3	43	18	A905203 0	47	4
A901106 3	47	11	A905203 0	49	4
A901106 3	49	11	A905203 1	45	12
A901111 1	5	27	A905203 1	47	16
A901111 1	9	2	A905203 1	49	16
A901115 2	13	4	A905601 0	7	9
A901200 1	37	7	A905601 1	37	15
A901200 2	29	30	A905601 3	27	19
A901200 2	37	14	A905601 8	25	1
A901205 1	21	15	A905602 0	21	1
A901205 2	43	10	A906502 8	29	27
A901205 2	47	21	EBY01110	23	12
A901205 2	49	21	EBY01120	35	4
A901205 3	15	33	EBY01240	53	3
A901205 5	37	18	EBY01250	53	2
A901205 6	27	12	EBY01260	53	4
A901206 8	33	10	EBY01270	53	5
A901212 6	41	10	EBY01290	53	12
A901212 6	51	14	EBY01300	53	10
A901212 7	41	12	EBY01320	53	11
A901212 7	51	12	EBY01330	53	7
A901214 3	37	22	EBY01340	53	9
A901215 4	5	3	EBY01350	53	6
A901216 3	11	16	EBY10310	53	8
A901216 4	17	10	HB130020	33	2

I N D E X

LIST No.	PAGE No.	ITEM	LIST No.	PAGE No.	ITEM
HB130020	51	2	HB240151	13	2
HB130030	33	2	HB240161	13	13
HB130030	51	2	HB240200	23	20
HB130040	3	33	HB240240	23	24
HB13008045	3	34	HB240300	23	13
HB210010	11	17	HB310030	51	10
HB210230	5	5	HB310070	31	7
HB210240	5	5	HB310070	33	16
HB220010	5	8	HB310080	33	9
HB230011	11	13	HB310100	33	7
HB230020	11	11	HB310110	31	1
HB230030	11	14	HB310120	33	14
HB230040	11	19	HB310140	31	11
HB230050	11	10	HB310160	33	6
HB230070	11	8	HB310160	51	1
HB230080	11	7	HB310180	33	20
HB230111	11	5	HB310180	51	19
HB230160	17	11	HB310280	31	15
HB230180	15	24	HB320030	9	1
HB230190	15	3	HB320050	9	1
HB230220	19	14	HB330010	35	12
HB230241	19	9	HB330020	35	5
HB230261	19	8	HB330040	37	5
HB230271	19	7	HB330050	37	20
HB230281	19	12	HB330060	37	16
HB230340	11	12	HB330070	37	2
HB230350	19	10	HB330080	37	17
HB230360	19	11	HB330090	37	1
HB230493	11	9	HB330101	37	21
HB230620	11	4	HB330111	35	9
HB230650	11	30	HB330120	37	3
HB230691	11	32	HB330130	35	7
HB230701	19	6	HB330140	35	1
HB230710	11	33	HB330150	35	15
HB230750	13	12	HB330170	35	6
HB230800	11	20	HB330190	35	14
HB240011	21	2	HB330200	35	13
HB240020	21	4	HB330211	35	11
HB240030	21	5	HB330221	35	10
HB240041	21	3	HB710010	55	7
HB240060	21	9	HB710020	55	17
HB240070	21	13	HH140260	3	10
HB240080	21	11	HH140940	3	36
HB240090	21	10	HH220570	5	13
HB240110	21	12	HH320550	31	10

I N D E X

LIST No.	PAGE No.	ITEM	LIST No.	PAGE No.	ITEM
HH330670	37	25	HP220730	5	10
HH330760	29	23	HP231370	17	26
HH330770	37	10	HP241430	55	5
HH330810	37	26	HP250763	5	1
HH481931	45	3	HP250765	7	25
HH481931	51	6	HP271700	29	20
HH481970	9	6	HP272002	7	16
HH481970	43	19	HP272550	7	1
HH481970	47	13	HP272560	7	2
HH481970	49	13	HP272570	7	8
HH481980	43	16	HP310150	33	8
HH481980	47	9	HP310220	31	17
HH481980	49	9	HP321082	5	16
HH481991	43	13	HP321090	5	17
HH481991	47	18	HP321100	33	4
HH481991	49	18	HP321110	3	28
HH482000	43	14	HP321140	51	3
HH482000	47	17	HP321710	9	7
HH482000	49	17	HP321720	9	8
HH482031	43	4	HP331560	37	13
HH482041	43	5	HP331610	37	12
HH48209G45	43	9	HP331660	37	8
HH482110	43	12	HP331700	37	23
HH482110	47	19	HP331922	9	10
HH482110	49	19	HP331950	37	24
HK220681	5	9	HP451080	45	5
HP120020	3	3	HP451100	47	3
HP120030	3	31	HP451100	49	3
HP130021	3	25	HP45111G45	45	7
HP140090	3	19	HP45112G530	47	26
HP14010085	3	18	HP45112G530	49	26
HP140111	3	8	HP460121	41	8
HP140120	3	14	HP460160	41	11
HP140170	3	21	HP460160	51	13
HP140490	3	12	HP460170	41	9
HP140841	3	11	HP460170	51	15
HP141080	3	15	HP48217G530	47	24
HP141090	3	20	HP48217G530	49	24
HP141450	3	9	HP482250	41	13
HP210341	5	15	HP482260	41	16
HP211050	5	15	HP482270	41	14
HP220680	5	9	HP482280	41	17
HP220701	5	11	HP482290	51	17
HP220712	5	4	HP482560	51	18
HP220720	5	10	HP482570	51	11

I N D E X

LIST No.	PAGE No.	ITEM	LIST No.	PAGE No.	ITEM
HP482580	51	16	HT230180	15	22
HP482590	41	15	HT230200	17	13
HP48281A45	41	7	HT230210	11	31
HP48282045	41	4	HT230220	21	7
HP482871	43	1	HT230251	15	7
HP482881	41	1	HT230262	15	34
HP482892	47	5	HT230270	13	15
HP48290G45	39	5	HT230280	17	20
HP482910	41	5	HT230290	17	15
HP482910	43	7	HT230300	13	6
HP482910	47	22	HT230320	17	2
HP482910	49	22	HT230330	15	30
HP482921	41	6	HT230340	17	3
HP482940	43	6	HT230361	27	23
HP482940	47	8	HT230370	17	4
HP482940	49	8	HT230380	19	4
HP482950	41	3	HT230410	19	13
HP482950	43	2	HT230420	19	5
HP482950	47	6	HT230450	17	6
HP482950	49	6	HT230460	17	7
HP483111	47	1	HT230470	17	14
HP48313G45	41	18	HT230480	17	8
HP483341	49	5	HT230490	17	1
HP483370	41	2	HT230500	17	5
HP483370	47	2	HT230510	17	12
HP483391	41	19	HT230520	17	16
HS460100	47	47	HT230530	17	19
HS480020	48	47	HT230540	13	7
HS482950	49	47	HT230550	15	21
HT230010	11	1	HT230560	17	21
HT230020	13	3	HT230570M	15	14
HT230030	13	8	HT230580	11	17
HT230041	15	29	HT230590	19	15
HT230062	15	17	HT230600	19	3
HT230070	13	9	HT230610	19	1
HT230080	13	11	HT230620	21	8
HT230090	11	2	HT230630	21	6
HT230091	11	18	HT230660	11	18
HT230100	11	3	HT230670	15	11
HT230111	15	32	HT230690	15	15
HT230120	15	10	HT230720	19	2
HT230130	15	2	HT230730	17	18
HT230141	15	8	HT230750	17	23
HT230151	15	28	HT230760	17	9
HT230170	13	10	HT230770	17	22

I N D E X

LIST No.	PAGE No.	ITEM	LIST No.	PAGE No.	ITEM
HT230810	15	6	HT270350	27	24
HT230830	27	35	HT270640	27	20
HT240000	13	1	HT330001	37	4
HT240010	13	14	HT710000	55	3
HT240020	23	9	HV310010	51	9
HT240061	23	10	HV310020	33	1
HT240100	57	1	HV310030	3	27
HT240120	23	1	HV310040	31	9
HT240130	23	2	HV310050	31	16
HT240140	23	3	HV310060	33	17
HT240150	23	4	HV310070	31	8
HT240160	23	5	HV310070	33	18
HT240170	23	6	HV310080	33	13
HT240180	23	7	HV310090	33	12
HT240211	23	15	HV310100	33	11
HT240220	23	16	HV310110	31	3
HT240220	23	22	HV310120	31	12
HT240230	23	17	HV310130	52	5
HT240240	23	19	HV310160	49	47
HT240250	57	2	HV330010	53	20
HT240270	57	3	HV330020	53	21
HT240280	57	4	HV480010	45	2
HT240290	57	5	HV480010	51	7
HT240300	57	6	HV480020	45	4
HT240310	57	7	HV480020	51	8
HT240331	23	18	HV480030	43	15
HT240340	57	9	HV480030	47	12
HT240390	23	11	HV480030	49	12
HT240430	23	23	HV480040	43	17
HT240440	23	25	HV480040	47	10
HT240460	23	21	HV480040	49	10
HT240470	23	26	HV480050	43	11
HT240520	23	14	HV480050	47	20
HT270001	27	2	HV480050	49	20
HT270010	27	22	HV480060	45	1
HT270021	27	5	HV480060	51	4
HT270030	27	1	HV480070	39	7
HT270040	27	4	HV480080	47	14
HT270062	27	25	HV480090	49	14
HT270070	25	3	HV480110	49	1
HT270080	27	11	HV48221G530	39	6
HT270090	27	14	HV510010	53	22
HT270100	27	10	HV510020	45	25
HT270110	25	14	HW480050	49	51
HT270120	27	9	HW480070	49	50

I N D E X

LIST No.	PAGE No.	ITEM	LIST No.	PAGE No.	ITEM
HW480080	49	49	KF530150	53	17
IFM2024053045G	39	3	KF530160	53	13
KB270012	7	6	KF710390	55	12
KC140121	3	23	KF730790	39	1
KC270101	27	18	KL220140	5	12
KC270271	27	6	KL230180	15	25
KC270292	27	7	KL270000	27	8
KC270970	7	3	KL270040	27	13
KC270980	7	24	KL270060	27	15
KC271440	29	2	KL270070	27	17
KC320820	31	2	KL270081	25	2
KC320820	33	5	KL270091	25	11
KC330170	35	3	KL270101	25	5
KC330180	29	3	KL270110	25	8
KC330280	35	2	KL270120	25	7
KC330310300	37	6	KL270130	25	6
KC330410	15	5	KL270260	25	9
KC330410	29	25	KL270440	25	13
KC330410	37	9	KL270450	25	12
KC330420	37	11	KL270520	27	16
KC520020	53	18	KN270951	7	7
KC530230	53	16	KN270960	7	23
KC530240	53	14	KN271190	7	21
KF220302	5	6	KN271190	7	21
KF220410	5	7	KN271220	7	18
KF220421	5	7	KN271521	7	1
KF220440	5	6	KN271560	7	4
KF220511	5	14	KN271610	7	13
KF220780	5	8	KN271620	7	8
KF230240	15	13	KN271630	7	10
KF230250	15	12	KN271645	7	11
KF230500	11	6	KN271671	7	15
KF230530	17	25	KN271712	29	8
KF230580	27	3	KN271720	29	24
KF230630	37	19	KN271732	29	15
KF230640	7	14	KN271750	29	11
KF230640	15	4	KN271781	29	10
KF230661	15	26	KN271800	29	29
KF230670	15	27	KN271980	7	2
KF230910	15	9	KN271990	29	9
KF240900	55	2	KN272350	29	12
KF250900	5	2	KN272400	7	12
KF330180	15	23	KN272400	25	4
KF530111	53	15	KN272400	27	21
KF530120	53	15	KN272540	7	19

I N D E X

LIST No	PAGE No	ITEM	LIST No	PAGE No	ITEM
KN310000	31	6			
KN310010	31	14			
KN313670	31	5			
KN450300	45	10			
KN450300	47	15			
KN450300	49	15			
KN480061	43	8			
KN480061	47	23			
KN480061	49	23			
KN511020	9	9			
KN540510	57	8			
KU460270	45	8			
KU460270	47	25			
KU460270	49	25			
LF-90671C	55	6			
MT460240	45	9			
MT460240	47	27			
MT460240	49	27			
WW140070	3	2			