Barudan

BENYHE-ZQ-B04/06

PARTS BOOK

Copyright 4/01

Barudan America, Inc.
29500 Fountain Parkway
Solon, Ohio 44139 USA

Part Numbers are subject to change due to continuing improvements.

BENYHE-ZQ-B
BENBHE-ZQ-B
HIGH SPEED AUTOMATIC EMBROIDERY MACHINE

Contents

Machine Layout

00A Table Frame A

00B Table Frame B

00C Table Frame C

01 Head-Bed

02A Thread Cut A

02B Thread Cut B

02C Thread Cut C

02D Thread Cut D

03 Take Up Lever

04A Needle Bar A

04B Needle Bar B

04C Needle Bar C

04D Needle Bar D

05 Jump

06A Thread Guide A (Standard)

06B Thread Guide B (UTSM)

Contents

07A Color Change A

07B Color Change B

08A Drive A

08B Drive B

10A Pantograph Drive A

10B-1 Pantograph Drive B-1

10B-2 Pantograph Drive B-2 (Tubular Arms)

10B-3 Pantograph Drive B-3 (Cap Frame)

10C Pantograph Drive C

10D Pantograph Drive D

10E Pantograph Drive E

10F Pantograph Drive F

10G Pantograph Drive G

10H Pantograph Drive H

10I Pantograph Drive I

10J Pantograph Drive J

11A-1 Control A (NY-2)

11A-2 Control A (NB)

11B Control B

12 Accessories

MACHINE LAYOUT (BENYHE-ZQ-B)

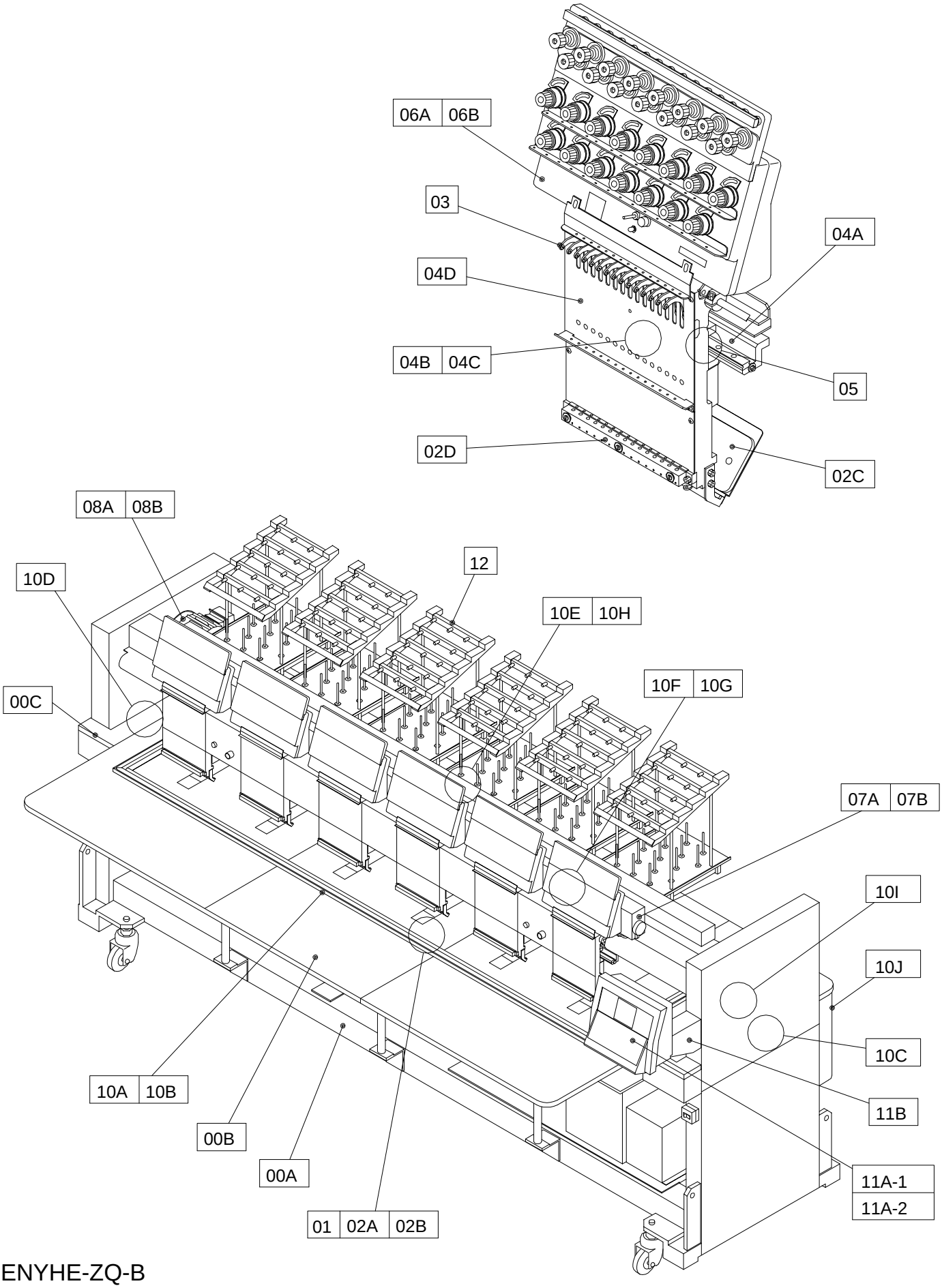

BENYHE-ZQ-B
BENBHE-ZQ-B

00A TABLE FRAME A

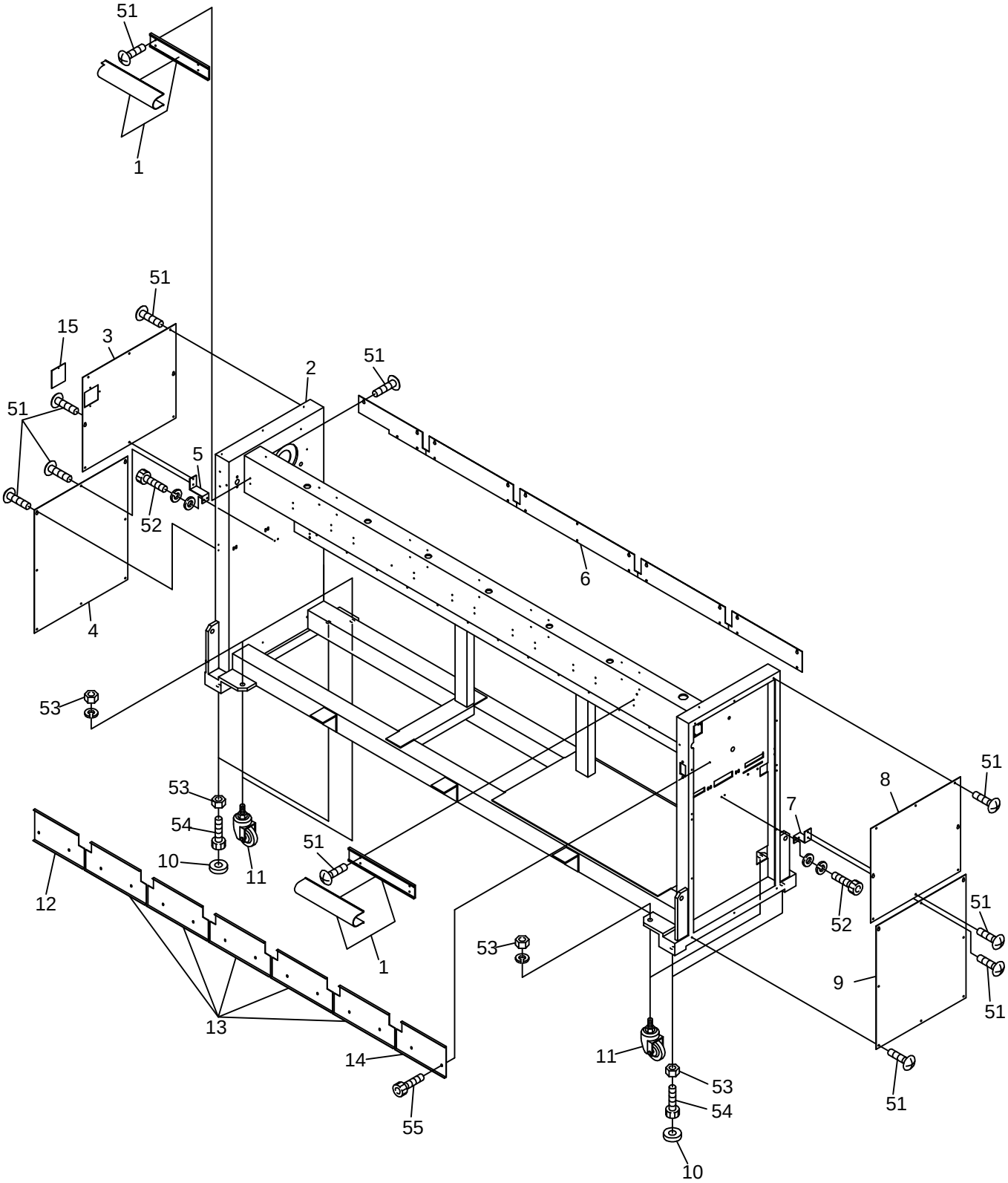

BENYHE-ZQ-B
BENBHE-ZQ-B

00A Table Frame A

ITEM	LIST NO.	DESCRIPTION	QTY	NOTE
1.	RQ130000	Shaft Cover (520)	1	
	RQ130011	Shaft Cover (380)	1	
2.	RQ160020	Frame Assembly (NYHE-B04,520)	1	
	RY160000	Frame Assembly (NYHE-B04,520) (ZQ5)		
	RQ160032	Frame Assembly (NYHE-B06,380)	1	
3.	RQ160240	Left Side Cover (Upper)	1	
4.	RQ160230	Left Side Cover (Lower)	1	
5.	RQ160260	Left Cover Support	1	
6.	RQ160180	Bridge Cover ZQ-B04 (520)	1	A = Left, B = Right
	RQ160180	Bridge Cover ZQ-B04 (520) (ZQ5)		A =left ,B =center ,C=right
	RQ160191	Bridge Cover ZQ-B06 (380)	1	
7.	RQ160250	Right Cover Support	1	
8.	RQ160220	Right Side Cover (Upper)	1	
9.	RQ160210	Right Side Cover (Lower)	1	
10.	RQ160010	Mounting Base	4	
11.	A9019005	Caster (420SA-UB 100mm)	4	
12.	RQ140120	Oil Cover Left (520)	1	
	RQ140131	Oil Cover Left (380)	1	
13.	RQ140140	Oil Cover Center (520)	3	
	RQ140150	Oil Cover Center (380)	5	
14.	RQ140100	Oil Cover Right (520)	1	
	RQ140111	Oil Cover Right (380)	1	
15.	RQ310060	Blind Lid		
51.		Truss Screw M5 x 8		
52.		Hex Socket Bolt M5 x 10		
53.		Hex Nut M20		
54.		Hex Bolt M20 x 65		
55.		Hex Socket Flange Bolt M6 x 12		

00B TABLE FRAME B

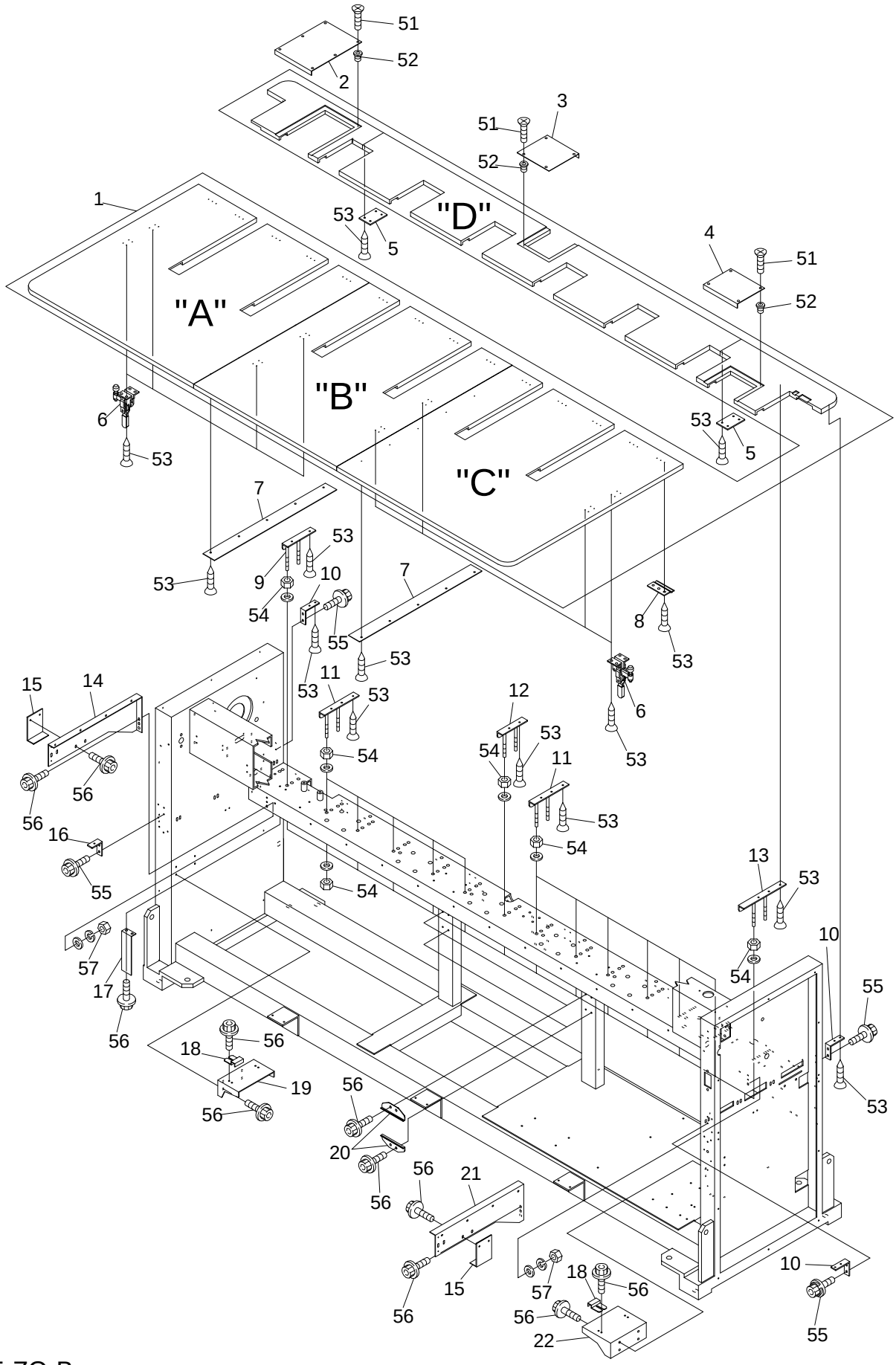

BENYHE-ZQ-B
BENBHE-ZQ-B

00B Table Frame B

ITEM	LIST NO.	DESCRIPTION	QTY	NOTE
1.	RQ120000	Table Top, NYHE-ZQ- B04	1	Sections A - D
	RQ120011	Table Top, NYHE-ZQ- B06	1	
2.	HM120011	Table Cover	1	
3.	RQ120070	Center Table Cover	1	
4.	HM120020	Right Table Cover	1	
5.	RQ120080	Connecting Plate	2	
6.	A100286	Vertical Flange Base Clamp	8	
7.	RQ120020	Joint Plate	2	
8.	HM140120	Table Stopper (Front)	10	4 head
			14	6 head
9.	RQ140010	Table Support #2	2	
10.	RQ140170	Side Table Support #1	3	
11.	RQ140000	Table Support #1	7	4 head
			11	6 head
12.	RQ140030	Table Support #4	1	
13.	RQ140020	Table Support #3	1	
14.	RQ140050	Table Support (Left)	1	
15.	RQ140250	Table Support (Center)	2	
16.	RQ140180	Side Table Support #2	1	
17.	RQ140160	Table Fixing Bracket	2	
18.	HM140100	Table Stopper Side	4	
19.	RQ140090	Lower Table Support (Left)	1	
20.	HM140060	Lower Table Support (Front)	4	
21.	RQ140040	Table Support (Right)	1	
22.	RQ140080	Lower Table Support (Right)	1	
51.		Screw, 8-32 x 3/8 Phillips Undercut Flat Head		
52.	A100140	#8-32 Wood Insert		
53.		#8-18 X 3/4” (Tek)		
54.		Hex Nut M10		
55.		Hex Socket Flange Bolt M5 x 16		
56.		Hex Socket Flange Bolt M6 x 16		
57.		Hex Nut M5		

00C TABLE FRAME C

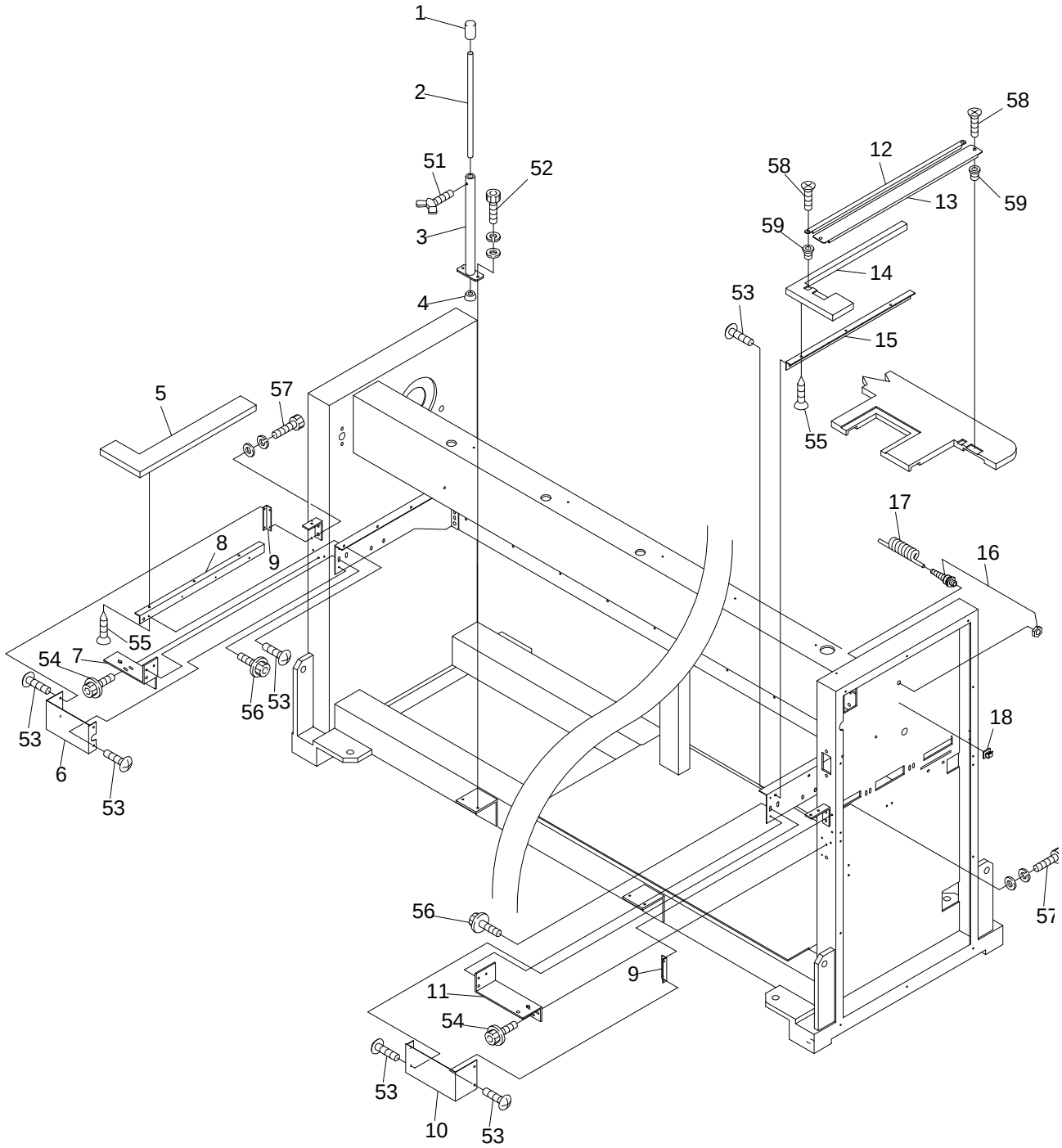

BENYHE-ZQ-B
BENBHE-ZQ-B

00C Table Frame C

ITEM	LIST NO.	DESCRIPTION	QTY	NOTE
1.	A100296	Table Support Cap (15mm)	3	
2.	KC320113	Table Support Stay (15mm Dia. x 360mm Long)	3	
3.	HM140230	Table Support	3	
4.	HM140250	Cushion Rubber	3	
5.	RQ120000	Table Top Section “E”	1	
6.	RQ140210	Front Cover (Left)	1	
7.	RQ140070	Table Support Stopper (Left)	1	
8.	RQ140230	Side Table Support Bracket (Left)	1	
9.	RQ140190	Bracket Fixing Cover	2	
10.	RQ140200	Front Cover (Right)	1	
11.	RQ140060	Table Support Stopper (Right)	1	
12.	RQ120050	H-Rail Space Cover (1)	1	
13.	RQ120060	H-Rail Space Cover (2)	1	
14.	RQ120000	Table Top Section “F”	1	
15.	RQ140220	Side Table Support Bracket (Right)	1	
16.	A9068030	Bushing (NW-7RP)	1	
17.	A9053065	Retractable Coil Cord		
18.	A9068031	Wire Clamp		
51.		Wing Screw M6 x 16		
52.		Hex. Socket Bolt M6 x 15		
53.		Phillips Truss Head Screw M4 x 6		
54.		Hex Socket Flange Bolt M5 x 16		
55.		#8-18 X 3/4” (Tek)		
56.		Hex Socket Flat Head Screw M5 x 15		
57.		Hex. Socket Bolt M4 x 10		
58.		Screw, 8-32 x 3/8 Phillips Undercut Flat Head		
59.	A100140	#8-32 Wood Insert		

01 HEAD BED

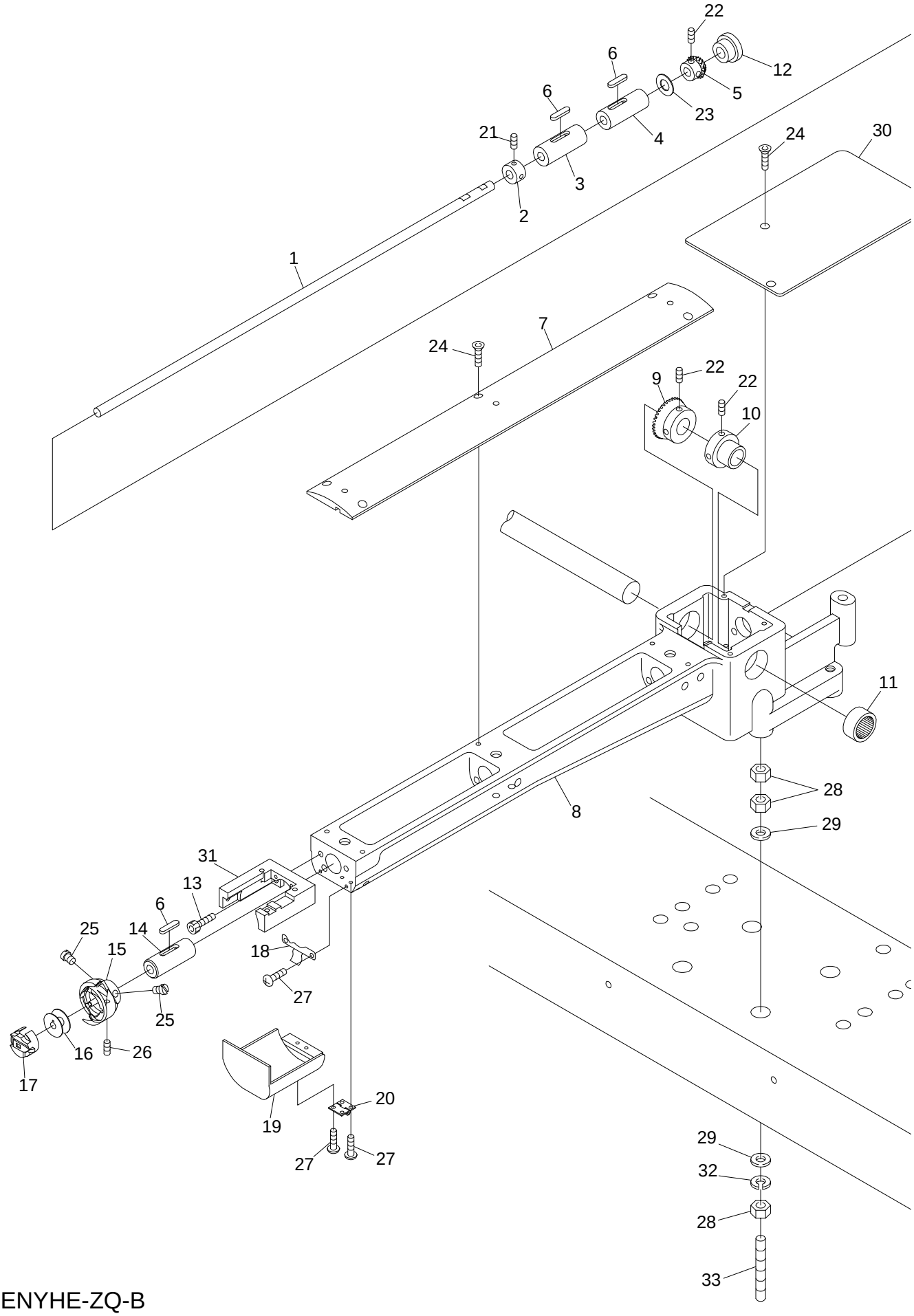

BENYHE-ZQ-B
BENBHE-ZQ-B

01 Head-Bed

(H=Head Qty.)

ITEM	LIST NO.	DESCRIPTION	QTY	NOTE
1.	HS210021	Lower Shaft	Hx1	Small Hook
	HS210020	Lower Shaft	Hx1	Medium Hook
2.	KF220290	Lower Shaft Collar	Hx1	
3.	KF220230	Lower Shaft Metal (Front)	Hx1	
4.	KL220270	Lower Shaft Metal (Rear)	Hx1	
5.	HP220712	Lower Shaft Gear (Small)	Hx1	
6.	KL220140	Oil Felt “C” (5 x 25 x 20)	Hx3	
7.	HS210190	Cylinder Bed Cover	Hx1	
8.	HS210013	Cylinder Bed, R-Type	Hx1	Small Hook
	HS210230	Cylinder Bed, R-Type	Hx1	Medium Hook
9.	HP321082	Lower Shaft Connecting Gear (Large)	Hx1	
10.	HP321090	Lower Shaft Connecting Collar	Hx1	
11.	A9011111	Needle Bearing (TLA-2012Z)	Hx1	
12.	A9014059	Grommet (MG-1)	Hx1	
13.		Hex Socket Bolt M5x15		
14.	KF220240	Arm Shaft Bushing (Upper)	Hx1	
15.	KF220700	Sewing Hook (HSL-ATR M1QTS)	Hx1	Small Hook
	HB220010	Sewing Hook (HMS-A M2QTS)	Hx1	Medium Hook
16.	KF220530	Bobbin	Hx1	Small Hook
	KF220421	Bobbin (HMS DBM)	Hx1	Medium Hook
17.	KF220981	Bobbin Case (SC35-BNS-3)	Hx1	Small Hook
	KF220302	Bobbin Case (BC-DB MZ2 NBL5)	Hx1	Medium Hook
18.	KC250482	Cylinder Bed Hook Cover Holding Spring	Hx1	
19.	HS210030	Cylinder Bed Hook Cover	Hx1	
20.	A9012027	Hinge (TH-TM-72)	Hx1	
21.		Hex Socket Set Screw SM ¼-40 x 4		
22.		Hex Socket Set Screw M5 x 6		
23.	A9012154	Thrust Washer (TRA-512)	Hx1	
24.	KX250080	Throat Plate Screw (Hex Socket)	Hx7	
25.		Screw SM 11/64-40 x 5		
26.		Set Screw SM 11/64-40 x 5		
27.		Phillips Pan Head Screw M3 x 6		
28.		Hex Nut M8		
29.		Flat Washer M8		
30.	HS210042	Bed Cover	Hx1	
31.	LA210080	Throat Plate Base	Hx1	Small Hook
	HS210200	Throat Plate Base	Hx1	Medium Hook
32.		Spring Washer M8		
33.		Hex Socket Set Screw M8 x 70		

02A THREAD CUT A

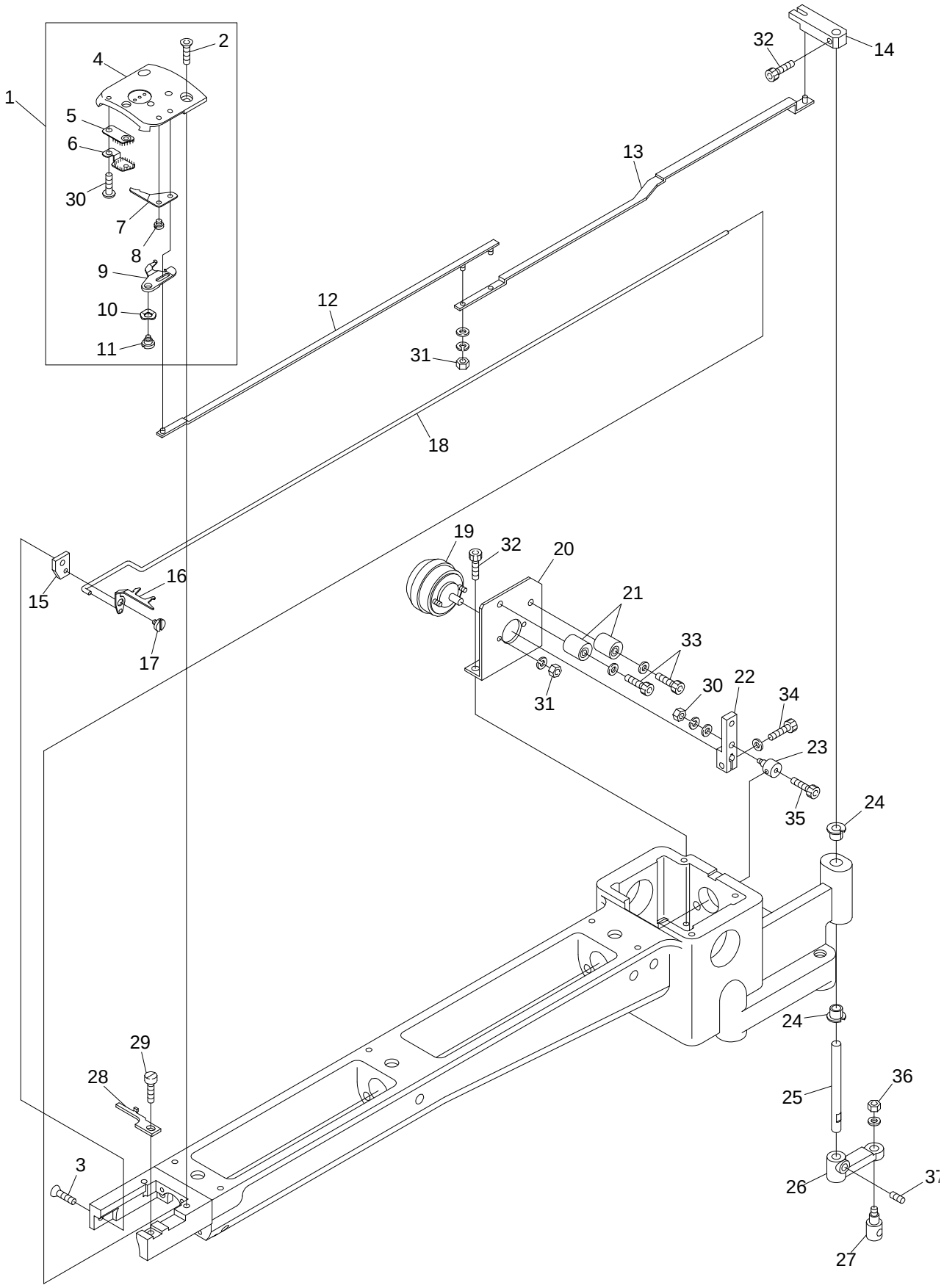

BENYHE-ZQ-B
BENBHE-ZQ-B

02A Thread Cut A

(H=Head Qty.)

ITEM	LIST NO.	DESCRIPTION	QTY	NOTE
1.	KX270281	Throat Plate Assembly (MK-5)	Hx1	With Washer
	ZKX270282	Throat Plate Assembly, ZN/ZQA (MK-5)		Without Washer
2.	KX250080	Throat Plate Screw	Hx2	
3.		Hex Socket Flush Screw M4x 6	Hx1	
4.	KX270022	Throat Plate, ZN/ZQA (MK-5)	Hx1	
5.	HT270160	Lower Thread Support Stay (Upper)	Hx1	
6.	HT270180	Lower Thread Support Stay (Lower)	Hx1	
7.	KN270961	Fixed Knife	Hx1	
8.	KX270010	Fixed Knife Set Screw	Hx1	
9.	KN270952	Driving Knife	Hx1	
10.	A9013066	Wave Washer (WW-5 SK)	Hx1	
11.	KC270970	Knife Turning Shaft	Hx1	
12.	HS210111	Knife Drive Rod A	Hx1	
13.	HS210121	Knife Drive Rod B	Hx1	
14.	HS210100	Knife Lever (Upper)	Hx1	
15.	HS210050	Fork Attaching Stay	Hx1	
16.	HS210143	Trimmer Fork	Hx1	Small Hook
	HS210142	Trimmer Fork	Hx1	Medium Hook
17.	KC271001	Upper Thread Knife Turning Shaft	Hx1	
18.	HS210070	Fork Driving Rod	Hx1	
19.	A9056030	Rotary Solenoid, Trimmer Fork (M960371R)(ETL)	Hx1	
20.	HS210061	Solenoid Stay	Hx1	Small Hook
	HS210060	Solenoid Stay	Hx1	Medium Hook
21.	KN272401	Eccentric Stopper	Hx2	
22.	KC271940	Solenoid Lever A	Hx1	
23.	HS210080	Connecting Clamp	Hx1	
24.	A9011173	DU Bushing With Flange (MB060-12FDU)	Hx2	
25.	HS210090	Knife Lever Driving Shaft	Hx1	
26.	KN271560	Knife Lever (Lower)	Hx1	
27.	HM270000	Connecting Bar Clamp	Hx1	
28.	KX270000	Hook Position Bracket	Hx1	
29.	A9012007	Hook Position Bracket Screw (SM11/64-40 x 7)	Hx1	
30.		Pan Head Screw M3 x 3		
31.		Hex Nut M3		
32.		Hex Socket Bolt M4 x 8		
33.		Hex Socket Bolt M4 x 18		
34.		Hex Socket Bolt M4 x 10		
35.		Hex Socket Bolt M3 x 5		
36.		Hex Nut M4		
37.		Hex Socket Set Screw M5 x 6		

02B THREAD CUT B

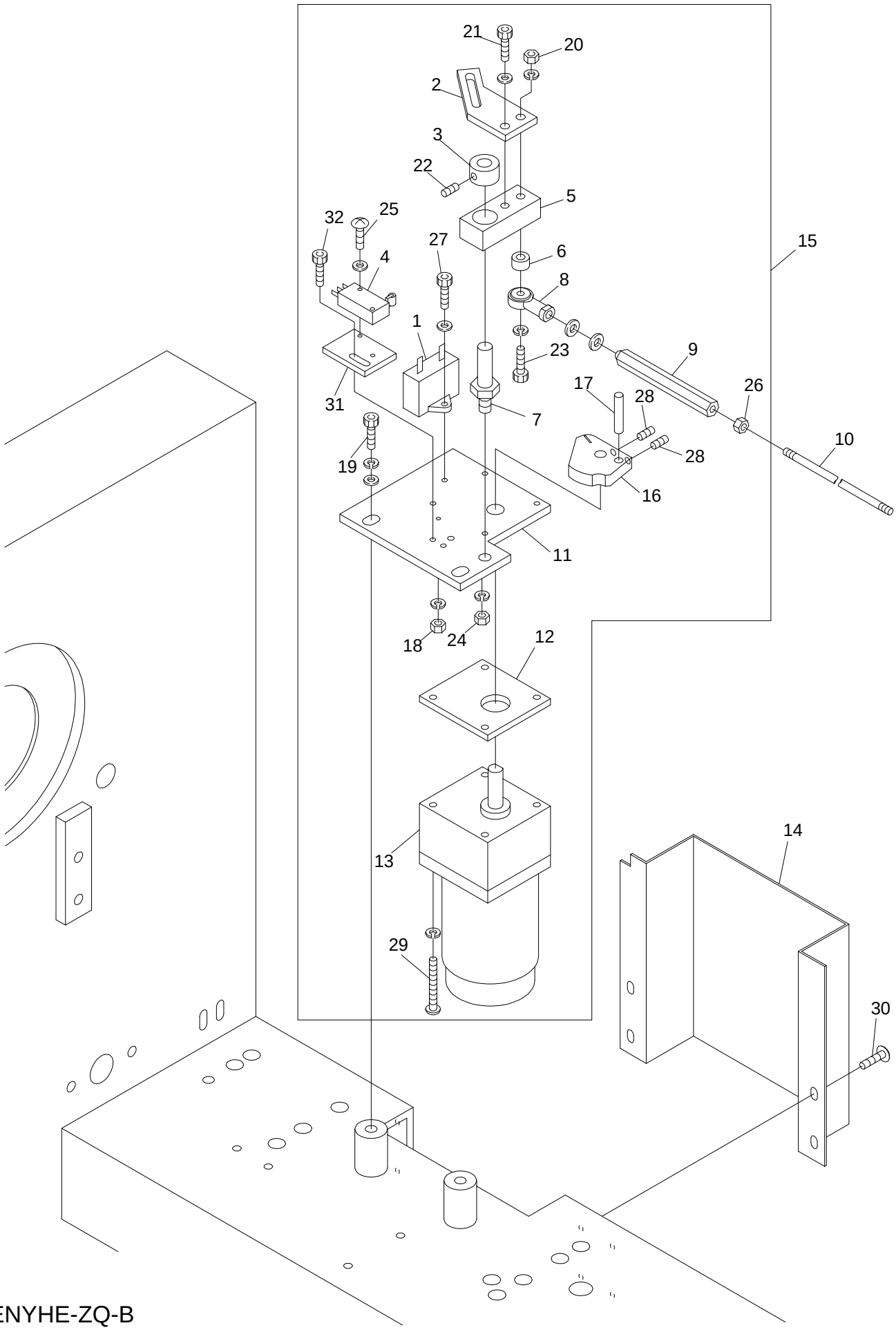

BENYHE-ZQ-B
BENBHE-ZQ-B

02B Thread Cut B

ITEM	LIST NO.	DESCRIPTION	QTY	NOTE
1.	A9054041	Condenser (4uf - 200V)	1	
2.	HS270030	Motor Cam Lever	1	
3.	KC330180	Collar (10.0 Dia.)	1	
4.	A9052078	Micro Switch (D2VW-01L2A-1)	1	
5.	KN271728	Drive Lever	1	
6.	HM270010	Motor Lever Collar	1	
7.	KN271750	Motor Lever Turning Shaft	1	
8.	A9012002	Uniball Joint (PR-6)	1	
9.	KC330510	Hex Connecting Rod	1	
10.	KC330410	Lock Connecting Rod (1835mm)	1	
11.	HS270011	Motor Bracket	1	
12.	KC271430	Motor Spacer	1	
13.	A9065088	Trimmer Motor (RM-H6A8PE-AA3526RH-D36X115) (ETL)	1	
14.	RQ480240	Trimmer Motor Frame Cover	1	
15.	HS270100	Trimmer Motor Drive Assembly (ETL)	1	
16.	HN270010	Drive Cam, HE (MK-5)	1	
17.	KN272350	Drive Pin	1	
18.		Hex Nut M3		
19.		Hex Socket Bolt M8 x 20		
20.		Hex Nut M6		
21.		Hex Socket Bolt M6 x 12		
22.		Hex Socket Set Screw M5 x 6		
23.		Hex Socket Bolt M6 x 55		
24.		Hex Nut M8		
25.		Phillips Truss Head Screw M3 x 20		
26.		Hex Nut M5		
27.		Hex Socket Bolt M4 x 10		
28.		Hex Socket Set Screw M5 x 6		
29.		Phillips Pan Head Screw M5 x 60		
30.		Phillips Truss Head Screw M4 x 6		
31.	HS270070	Micro Switch Fixed Bracket		
32.		Hex Socket Bolt M4 x 12		
	A9053082	Trimmer Motor Cable (0.75 x 6 x 4m)	1	Not Shown

02C THREAD CUT C

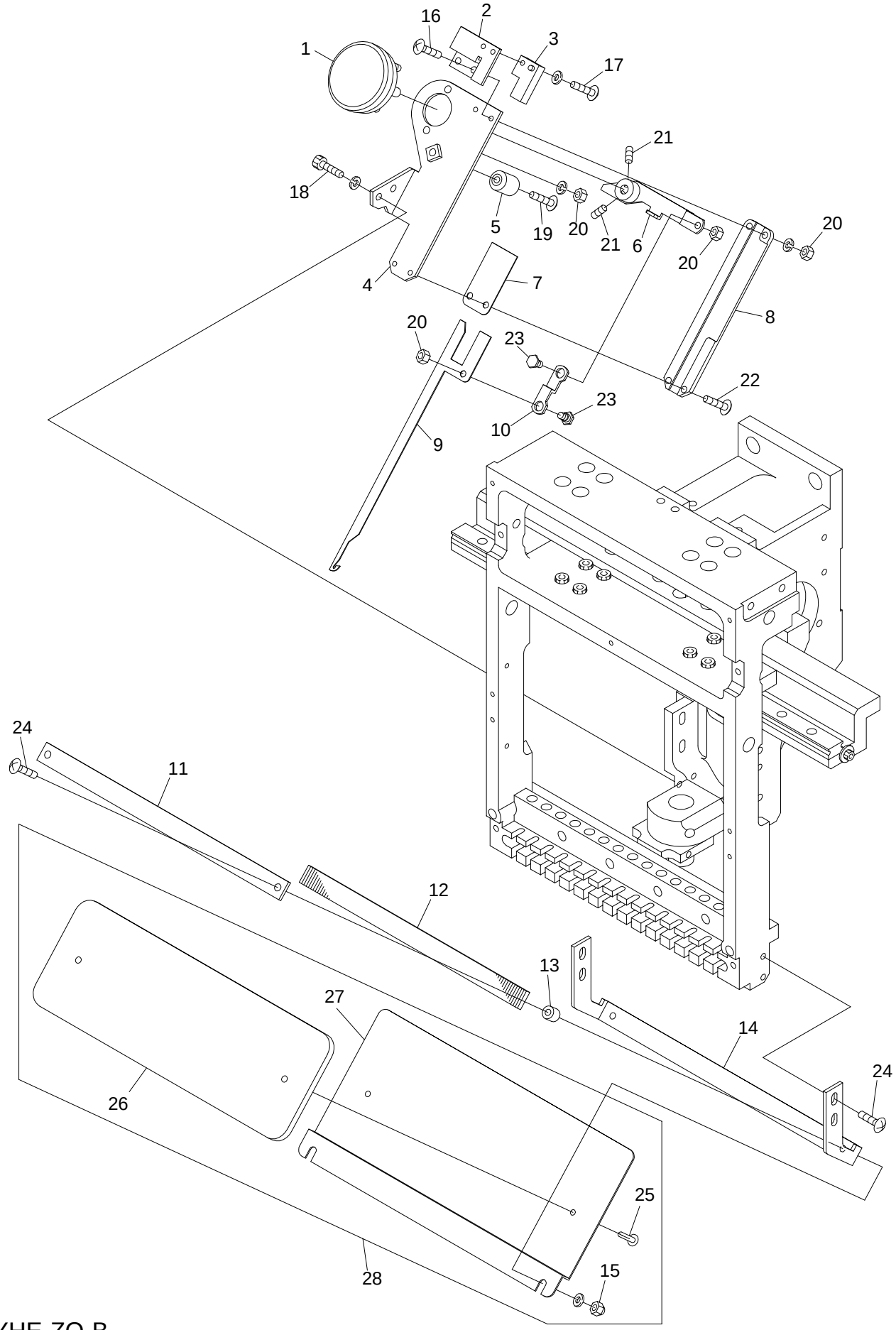

BENYHE-ZQ-B
BENBHE-ZQ-B

02C Thread Cut C

(H=Head Qty.)

ITEM	LIST NO.	DESCRIPTION	QTY	NOTE
1.	A9056031	Rotary Solenoid, Slider (M970385R) (ETL)	Hx1	
2.	KL270260	Switch Stay	Hx1	
3.	A9052028	Proximity Switch (RS-603)	Hx1	
4.	KL270081	Thread Away Base	Hx1	
5.	KN272401	Eccentric Stopper	Hx1	
6.	KL270110	Thread Away Solenoid Lever	Hx1	
7.	KL270450	Hook Guide Plate	Hx1	
8.	KL270091	Thread Away Hook Guide	Hx1	
9.	KL270101	Thread Away Hook	Hx1	
10.	KL270120	Connecting Plate	Hx1	
11.	RD270040	Thread Guard Plate	Hx1	
12.	RD270020	Thread Keep Plate	Hx1	
13.	KX270070	Thread Guard Spacer	Hx2	
14.	RD270031	Thread Guard Plate Bracket	Hx1	
15.		Cap Nut M4		
16.		Phillips Truss Head Screw M3 x 10		
17.		Phillips Truss Head Screw M3 x 6 (with Washer)		
18.		Hex Socket Bolt M4 x 12 (with Washer)		
19.		Phillips Truss Head Screw M4 x 16		
20.		Hex Nut M4		
21.		Hex Socket Set Screw M4 x 8		
22.		Phillips Truss Head Screw M3 x 6		
23.	KL270130	Lever Connection Pin	Hx2	
24.		Phillips Truss Head Screw M4 x 8		
25.	A9014158	Brass Rivet (2.5 Dia. x 12mm)	Hx2	
26.	RD250150	Oil Cover Felt	Hx1	
27.	RD250140	Oil Cover	Hx1	
28.	RD250160	Oil Cover Set	Hx1	
	RV250100	Oil Cover Set (ZQ5)		

02D THREAD CUT D

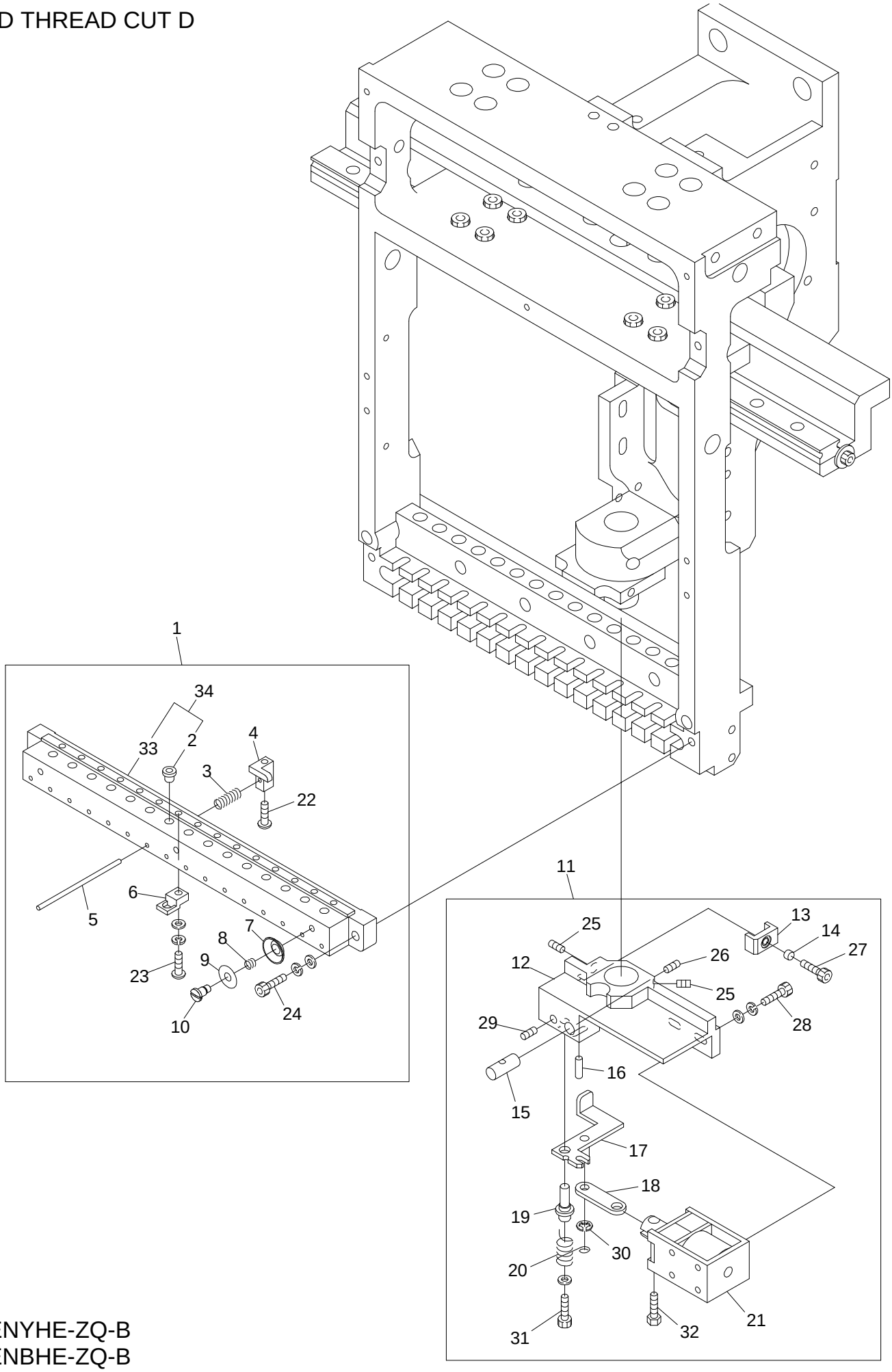

BENYHE-ZQ-B
BENBHE-ZQ-B

02D Thread Cut D

(H=Head Qty.)

ITEM	LIST NO.	DESCRIPTION	QTY	NOTE
1.	RD270050	Thread Support Apron Assembly	Hx1	
2.	KF230582	Ceramic Thread Guide	Hx15	
3.	KX270120	Thread Support Spring	Hx15	
4.	KX270090	Thread Support Clamp	Hx15	
5.	KX270110	Thread Support Pin	Hx15	
6.	KX270100	Thread Support Block	Hx15	
7.	KF250220	Thread Guard Disk	Hx15	
8.	KF250241	Thread Hook Spring	Hx3	
9.	KF250231	Thread Guard Spring Holder	Hx3	
10.	KF250250	Thread Hook Shaft Screw	Hx3	
11.	KX270340	Thread Keep Assembly	Hx1	
12.	LA270070	Thread Keep Base	Hx1	
13.	HT230520	Needle Bar Driver Stopper	Hx1	
14.	A9012368	Spacer Roll Bushing (3 x 4 x 2.5 Long)	Hx1	
15.	KX270360	Thread Support Push Rod	Hx1	
16.	KX270320	Thread Support Push Pin	Hx1	
17.	KX270290	Thread Support Lever	Hx1	
18.	KX270310	Thread Support Link	Hx1	
19.	KX270300	Thread Support Lever Pin	Hx1	
20.	KX270350	Thread Support Return Spring	Hx1	
21.	A9056037	Thread Keep Solenoid (TDS-K10SL)	Hx1	
22.	HT270062	Thread Support Clamp Set Screw	Hx15	
23.		Hex Socket Button Screw M3 x 10		
24.		Hex Socket Bolt M4 x 12		
25.		Hex Socket Set Screw M5 x 8		
26.		Hex Socket Set Screw M5 x 6		
27.		Hex Socket Bolt M3 x 6		
28.		Hex Socket Bolt M3 x 8		
29.		Hex Socket Set Screw M4 x 4		
30.	A9012127	E- Ring (3.0 Dia.)	Hx1	
31.		Hex Nut M3		
32.	KC270101	Solenoid Pin	Hx1	
33.	RD270010	Thread Support Apron	Hx1	
34.	RD270060	Thread Support Apron (Thread Guide)	Hx1	

03 TAKE UP LEVER

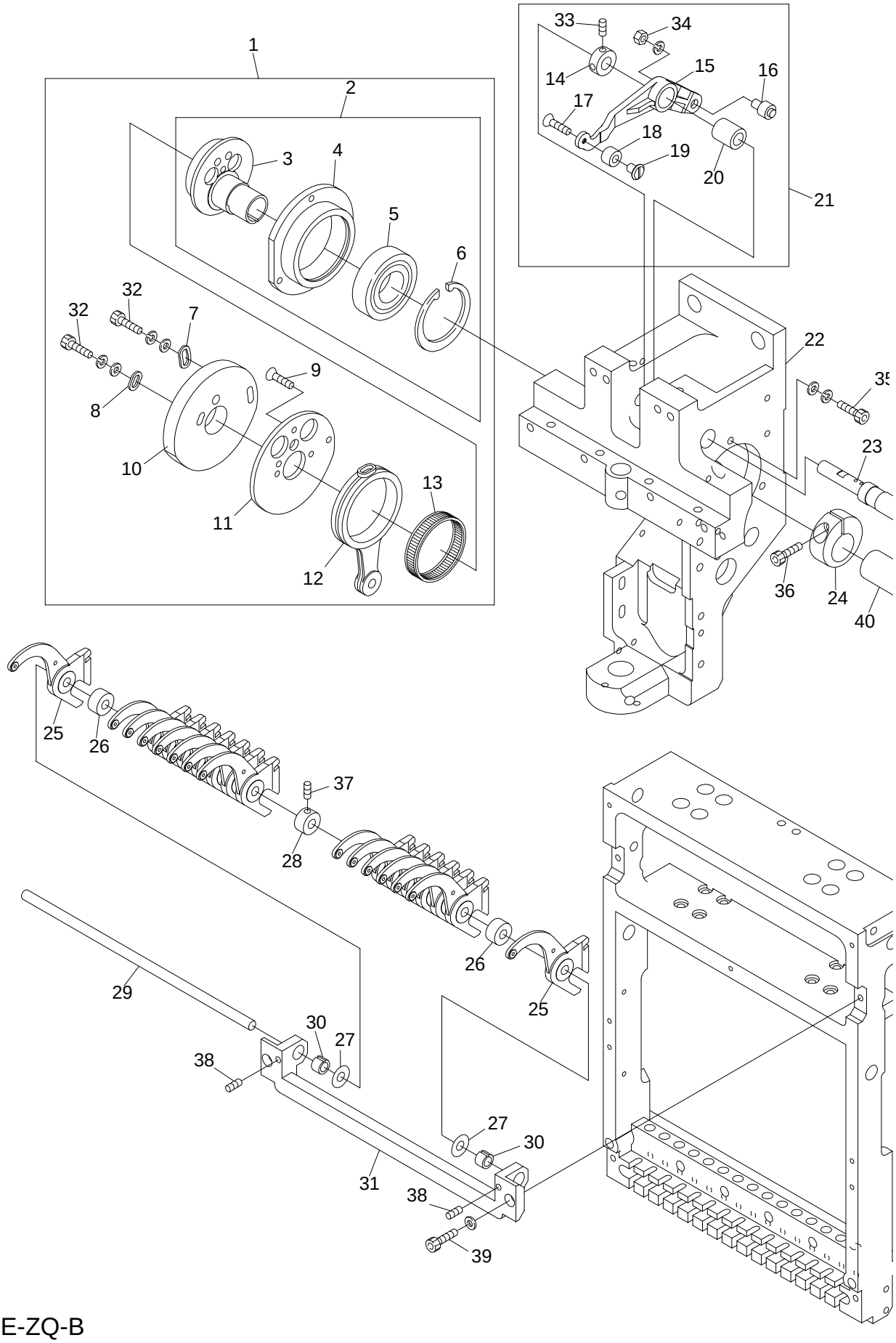

BENYHE-ZQ-B
BENBHE-ZQ-B

03 Take Up Lever

(H=Head Qty.)

ITEM	LIST NO.	DESCRIPTION	QTY	NOTE
1.	HB230681	Take Up Lever Needle Bar Driver Assembly	Hx1	Small Hook
	HB230691	Take Up Lever Needle Bar Driver Assembly	Hx1	Medium Hook
	RN230000	Take Up Lever Needle Bar Driver Assy. (ZQ5)	Hx1	Small Hook
	RN230060	Take Up Lever Needle Bar Driver Assy. (ZQ5)	Hx1	Medium Hook
2.	HB230710	Needle Bar Driving Cam Assembly	Hx1	
3.	HB230011	Needle Bar Driving Cam (Eccentric 9.2)	Hx1	
	RN230020	Needle Bar Driving Cam (ZQ5)		
4.	HB230030	Bearing Case	Hx1	
5.	A9010017	Bearing (6004ZZ)	Hx1	
6.	A9012163	C-Ring (42.0 Dia.)	Hx1	
7.	HB230080	Cam Washer (2)	Hx1	
8.	HB230070	Cam Washer (1)	Hx1	
9.	HB230620	Flush Pan Screw	Hx3	
10.	HB230062	Take Up Lever Cam (H6)	Hx1	Small Hook
	RH230290	Take Up Lever Cam (H6) (ZQ5)	Hx1	
11.	HB230051	Take Up Lever Cam Base	Hx1	
	RH230300	Take Up Lever Cam Base (ZQ5)	Hx1	
12.	HB230020	Needle Bar Crank Rod	Hx1	
	RH230280	Needle Bar Crank Rod (ZQ5)	Hx1	
13.	HB230341	Needle Roller Bearing	Hx1	
	RH230270	Needle Roller Bearing (ZQ5)	Hx1	
14.	HB230800	Driving Shaft Set Collar	Hx1	
15.	HT230012	Take Up Lever Driving Lever (YN Bridge)	Hx1	
	RH230311	Take Up Lever Driving Lever (ZQ5)	Hx1	
16.	KF230680	Cam Follower	Hx1	
17.	HB230650	Flush Screw (Roller Shaft)	Hx1	
18.	RD230120	Take Up Lever Driving Roller (BEMAX)	Hx1	
	RV230060	Take Up Lever Driving Roller (ZQ5)	Hx1	
19.	RD230130	Take Up Lever Driving Roller Shaft (BEMAX)	Hx1	
20.	HT230890	Take Up Lever Metal	Hx1	
21.	RD230290	Take Up Lever Driving Assembly	Hx1	
	RV230070	Take Up Lever Driving Assembly (ZQ5)		
22.	RD230010	Arm (ZQ-B)	Hx1	
23.	HT230660	Take Up Lever Driving Lever Fixing Pin	Hx1	
	RH230320	Take Up Lever Driving Lever Fixing Pin (ZQ5)		
24.	HB230040	Needle Bar Driving Cam Set Collar	Hx1	
	RH230330	Needle Bar Driving Cam Set Collar (ZQ5)		
25.	KX230152	Take Up Lever (ZN/ZQ)	Hx15	
26.	KX230141	Take Up Lever Spacer	Hx13	
27.	KX231310	Take Up Lever Shim (T= 0.3mm)	Hx2	
28.	RD230201	Take Up Lever Space Collar	Hx1	
29.	RD230080	Take Up Lever Shaft	Hx1	

03 TAKE UP LEVER CONT'D

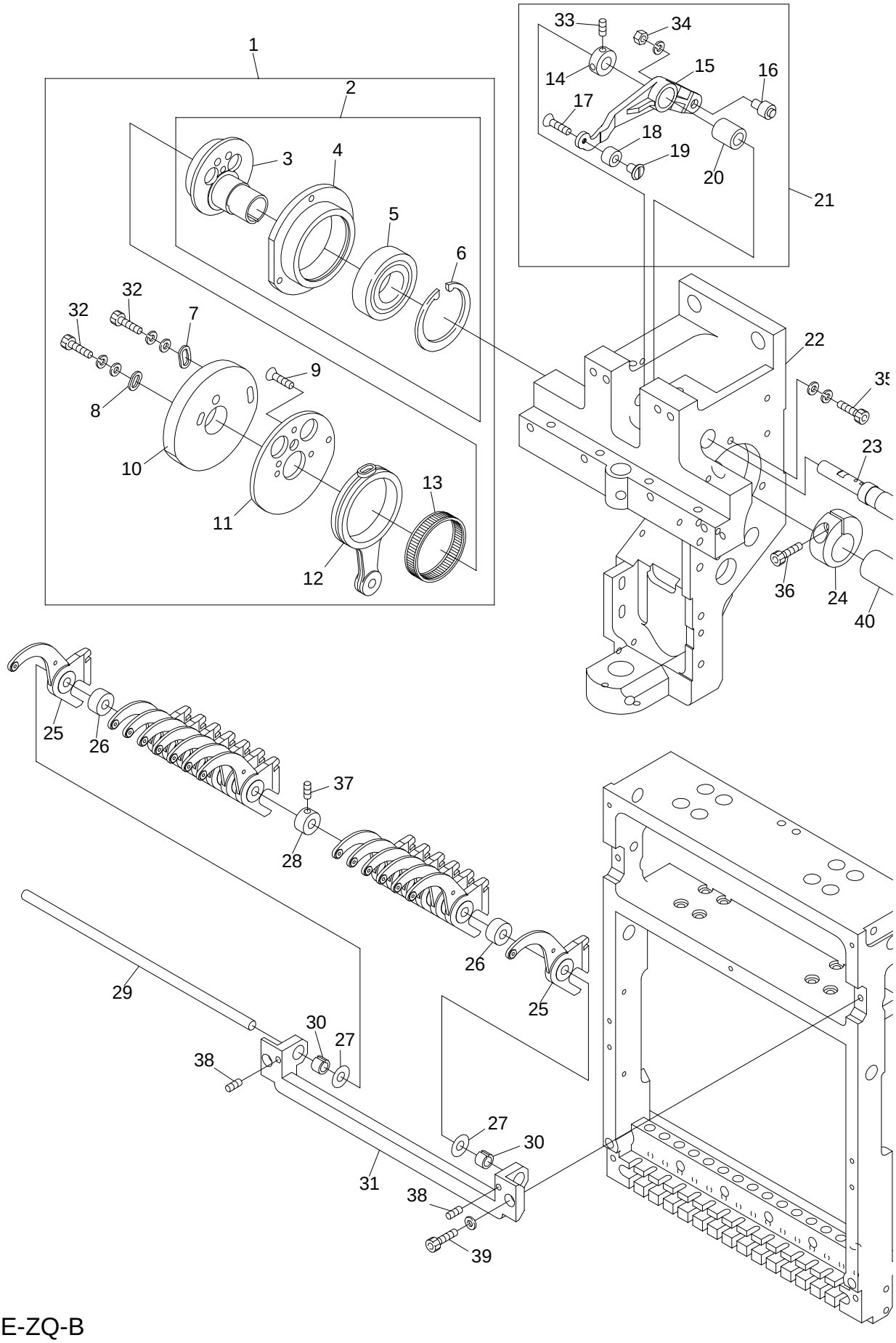

BENYHE-ZQ-B
BENBHE-ZQ-B

03 Take Up Lever Cont'd

(H=Head Qty.)

ITEM	LIST NO.	DESCRIPTION	QTY	NOTE
30.	KX230120	Take Up Lever Collar	Hx2	
31.	LA230281	Take Up Lever Bracket	Hx1	
32.		Hex Socket Bolt M4 x 8		
33.		Hex Socket Set Screw M4 x 4 (with Adhesion)		
34.	KF230501	Take Up Lever Roller Assembly	Hx1	
35.		Hex Socket Bolt M4 x 15		
36.		Hex Socket Bolt M5 x 18		
37.		Hex Socket Set Screw M4 x 4		
38.		Hex Socket Set Screw M4 x 8		
39.		Hex Socket Bolt M4 x 8 (with Washer)		
40.	KC320113	Main Shaft (15mm x 2130mm Long)		Cut Product
	RY310010	Main Shaft (20.0 Dia x 2130 Long) (ZQ5)		

04A NEEDLE BAR A

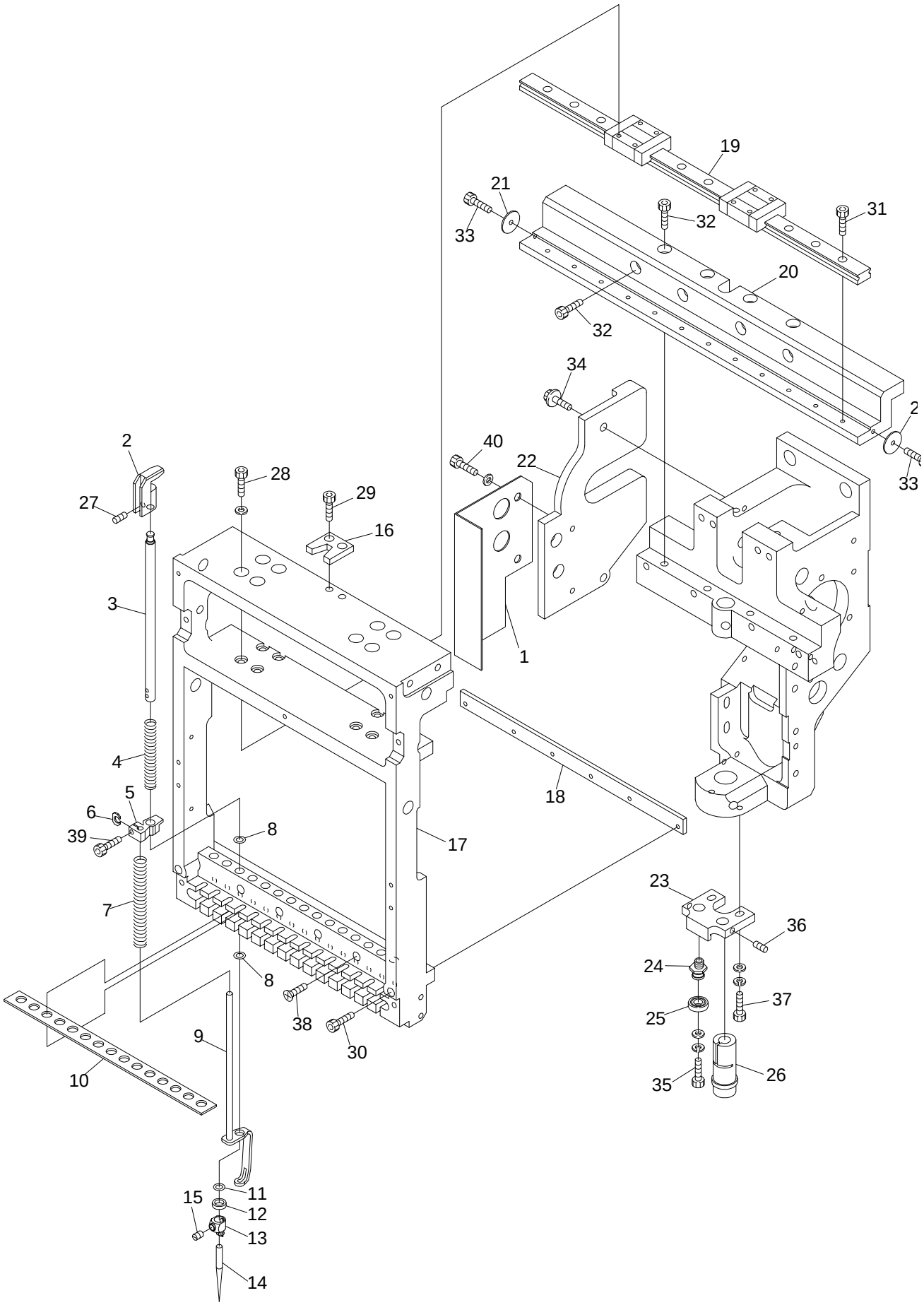

BENYHE-ZQ-B
BENBHE-ZQ-B

04A Needle Bar A

(H=Head Qty.)

ITEM	LIST NO.	DESCRIPTION	QTY	NOTE
1.	RD250080	Needle Bar Cover	1	Last Head
2.	RD230490	Needle Bar Guide	Hx15	
3.	RH230410	Needle Bar (YN5/ZQ4/ZQ5)	Hx15	Assembly (RD230480)
4.	KV230040	Needle Bar Spring, Upper (Thick)	Hx15	
5.	HT230330	Presser Foot Set Clamp	Hx15	
6.	HT230263	Set Clamp Washer	Hx15	
7.	KX230251	Needle Bar Spring, Lower (ZN)	Hx15	
8.	KF230920	O-Ring (Large)	Hx30	
9.	RD230370	Presser Foot	Hx15	
10.	RD230070	Needle Bar Felt	Hx1	
11.	KF230910	O-Ring (Small)	Hx15	
12.	HT230120	Washer (2.4)	Hx15	
13.	RH230450	Needle Clamp (with Hook)	Hx15	Assembly (RH230440)
14.	FN070011SNY	Needle (DBXK5-NY11S)	Hx15	
15.	RH230460	Needle Clamp Screw	Hx15	
16.	RD230170	Slide Block Fixing Plate	Hx1	
17.	RD230042	Slide Block	Hx1	Except For First Head
	RA230000	Slide Block	Hx1	First Head
18.	RD230060	Bearing Plate	Hx1	
19.	RD230020	LM-Guide	Hx1	
20.	RD230031	Base Plate	Hx1	
21.	KX230192	LM Stopper	Hx2	
22.	RD230180	Arm Support Fixing Bracket	Hx1	
23.	RD230050	Bearing Guide	Hx1	
24.	KX230080	Bearing Pin	Hx1	
25.	A9010065	Ball Bearing (686ZZ)	Hx1	
26.	KX230080	Drive Shaft Bushing (Lower)	Hx1	
27.		Hex Socket Set Screw M4 x 4		
28.		Hex Socket Bolt M3 x 8		
29.		Hex Socket Flat Head Screw M5 x 20		
30.		Hex Socket Bolt M3 x 25		
31.		Hex Socket Bolt M3 x 8		
32.		Hex Socket Bolt M5 x 15		
33.		Hex Socket Button Head Screw M4 x 15		
34.		Hex Socket Flange Bolt M4 x 12		
35.		Hex Socket Bolt M4 x 6 (with Washer)		
36.		Hex Socket Dog Point Set Screw M4 x 12		
37.		Hex Socket Bolt M4 x 15 (with Washer)		
38.		Hex Socket Flat Head Screw M3 x 25		
39.		Hex Socket Bolt M3 x 8		
40.		Hex Socket Bolt M4 x 10 (with Washer)		Last Head

04B NEEDLE BAR B

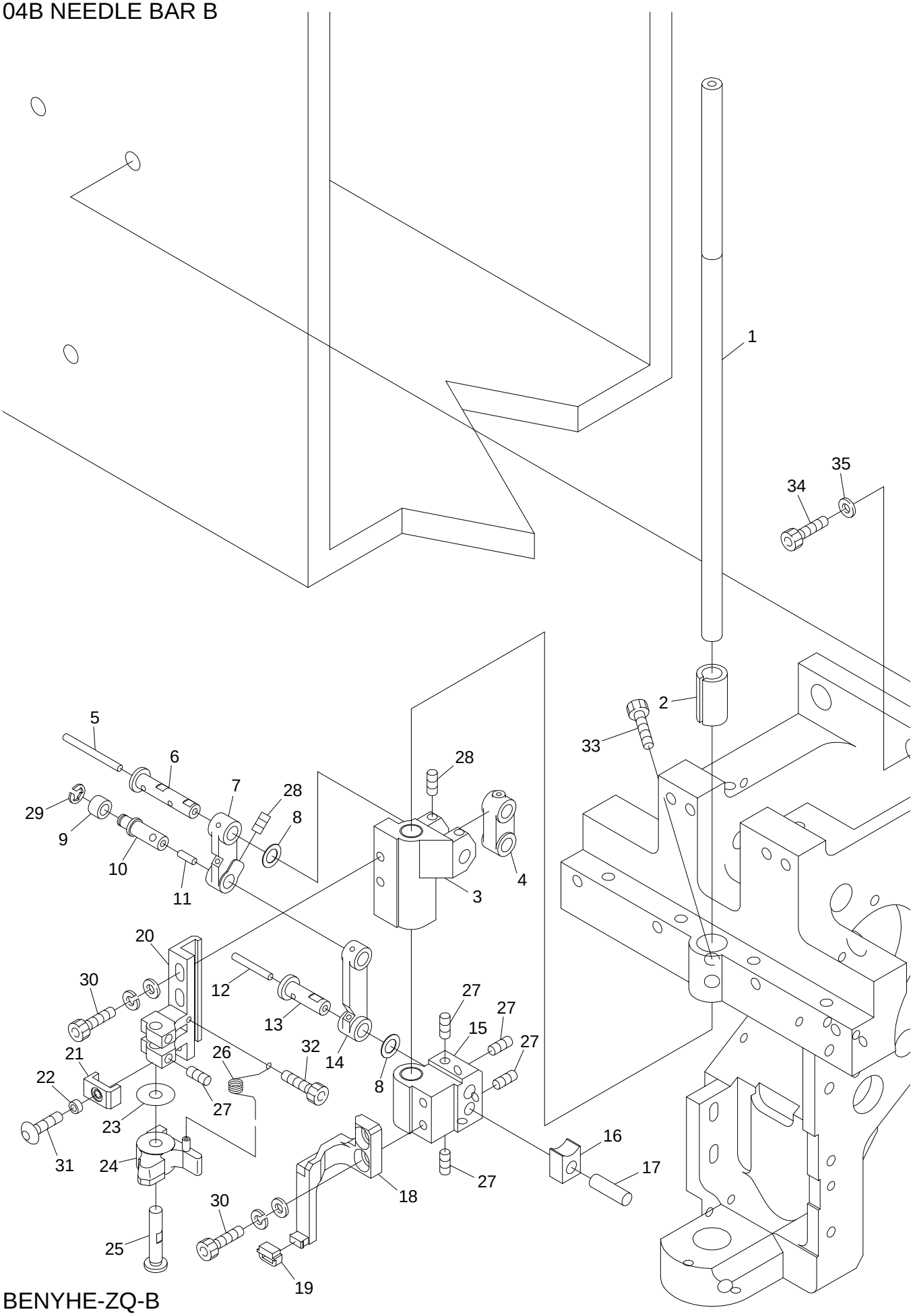

BENYHE-ZQ-B
BENBHE-ZQ-B

04B Needle Bar B

(H=Head Qty.)

ITEM	LIST NO.	DESCRIPTION	QTY	NOTE
1.	RD230140	Driving Shaft	Hx1	
	RV230020	Driving Shaft (ZQ5)	Hx1	
2.	RD230150	Driving Shaft Bushing (Upper)	Hx1	
3.	HT230510	Needle Bar Driving Slide Block	Hx1	
4.	HB230200	Needle Bar Drive Link	Hx1	
5.	HT230750	Oil Core (30mm)	Hx1	
6.	HT230470	Link Pin (Small)	Hx1	
7.	HT230490	Link (Small)	Hx1	
8.	HT230730	Shim Ring (10.0 Dia. T=0.3)	Hx2	
9.	KF230530	Roller (Take Up Lever)	Hx1	
10.	HT230450	Link Roller Joint Pin	Hx1	
11.	HT230760	Oil Core (8mm)	Hx1	
12.	HT230770	Oil Core (20mm)	Hx1	
13.	HT230460	Link Pin (Large)	Hx1	
14.	HT230480	Link (Large)	Hx1	
15.	HT230500	Set Slide Block	Hx1	
16.	HP231370	Square Ball	Hx1	
17.	HT230320	Square Ball Pin	Hx1	
18.	RD230390	Presser Foot Support (ZQ4)	Hx1	NYHE/NBHE-ZQ-B
	RR230030	Presser Foot Support (ZQ5)		
19.	HT230340	Presser Foot Support Rubber	Hx2	
20.	HT230290	Needle Bar Driver Fixing Base (YN2/ZQ-B)	Hx1	
21.	HT230520	Needle Bar Driver Stopper	Hx1	
22.	A9012368	Spacer (3 x 4 x 2.5 Long)	Hx1	
23.	RH230550	Shim Ring	Hx1	
24.	RH230540	Needle Bar Driver	Hx1	NYHE/NBHE-ZQ-B
25.	HT230280	Needle Bar Driver Pin	Hx1	
26.	HT230560	Needle Bar Driver Return Spring	Hx1	
27.		Hex Socket Set Screw M4 x 4 (with Nylon)		
28.		Hex Socket Set Screw M4 x 6 (with Nylon)		
29.		E-Ring (3.0 Dia.)		
30.		Hex Socket Bolt M4 x 12 (with Washers)		
31.		Hex Socket Button Head Bolt M3 x 6		
32.		Hex Socket Bolt M4 x 6 (with Washer)		
33.		Hex Socket Bolt M5 x 20		
34.		Hex Socket Bolt M5 x 20		
35.		Disk Spring M8		

04C NEEDLE BAR C

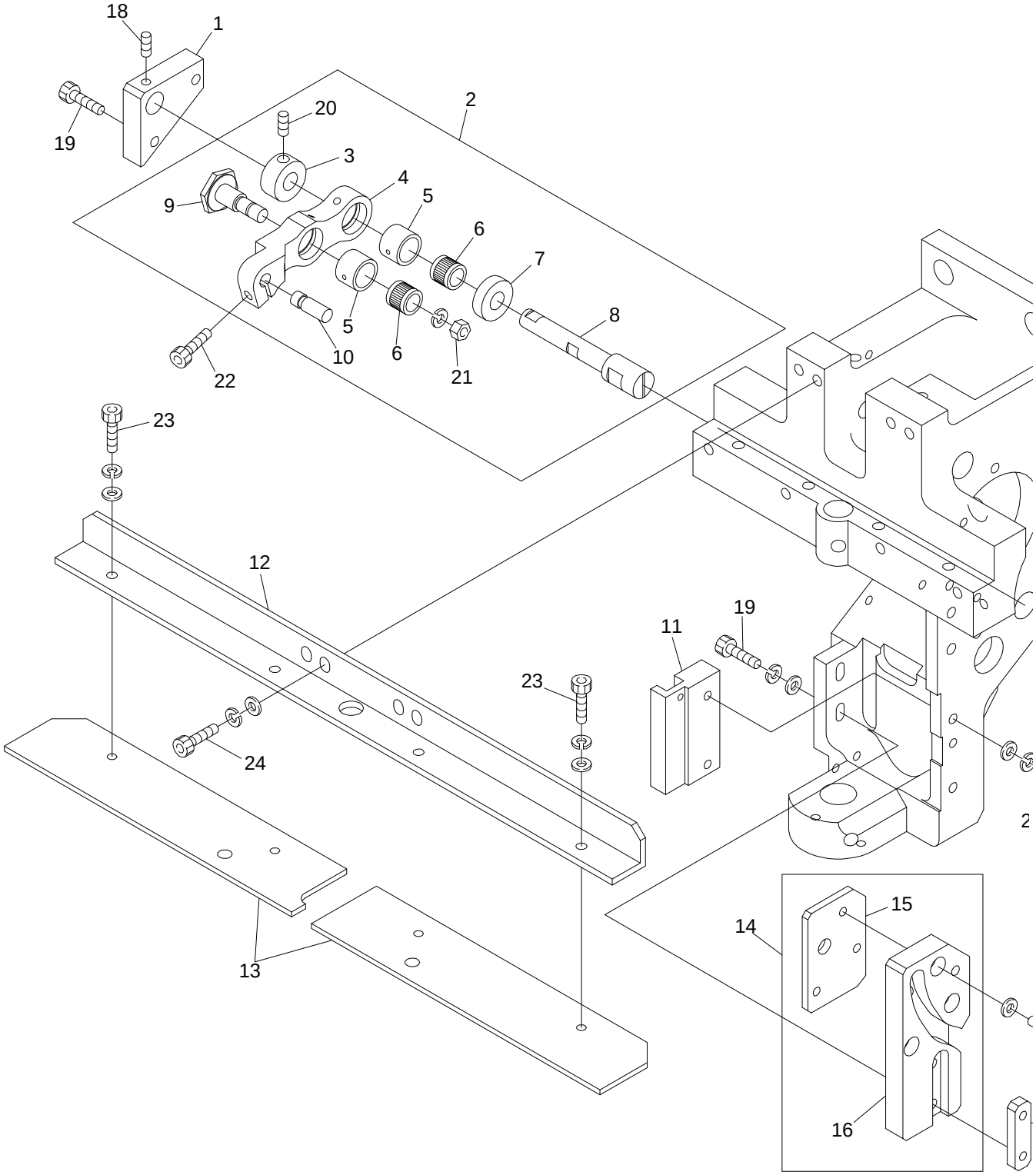

BENYHE-ZQ-B
BENBHE-ZQ-B

04C Needle Bar C

(H=Head Qty.)

ITEM	LIST NO.	DESCRIPTION	QTY	NOTE
1.	HT230590	Lever Pin Block	Hx1	
2.	HT230930	Needle Bar Driving Lever Assembly	Hx1	
3.	HB230271	Needle Bar Driving Lever Fixing Collar	Hx1	
4.	HB230241	Needle Bar Driving Lever	Hx1	
5.	HB230350	Outer Ring (OR11x14x10x11)	Hx2	
6.	HB230361	Needle Roller Retainer (KV8x11x10SV2)	Hx2	
7.	HB230281	Needle Bar Driving Lever Fixing Pin Collar	Hx1	
8.	HT230410	Needle Bar Driving Lever Fixing Pin	Hx1	
9.	HB230261	Needle Bar Driving Lever Connecting Pin	Hx1	
10.	HB230220	Needle Bar Driving Lever Pin	Hx1	
11.	HT230420	Guide Plate	Hx1	
12.	RD230100	Take Up Lever Stocker Base	Hx1	
13.	RD230160	Take Up Lever Stocker	Hx1	
	RV230180	Take Up Lever Stocker (ZQ5)		
14.	HT230610	Presser Foot Cam Assembly	Hx1	
15.	HT230600	Cam Back Plate	Hx1	
16.	HT230720	Presser Foot Cam (K2)	Hx1	
17.	HT230380	Cap Tap Plate	Hx1	
18.		Hex Socket Set Screw M4 x 4 (with Nylon)	Hx1	
19.		Hex Socket Bolt M4 x 15 (with Washers)		
20.		Hex Socket Set Screw M5 x 5		
21.		Hex Nut M6		
22.		Hex Socket Bolt M4 x 14 (with Adhesive)		
23.		Hex Socket Bolt M4 x 8		
24.		Hex Socket Bolt M5 x 15		
25.		Hex Socket Bolt M4 x 18		
26.		Hex Socket Bolt M4 x 8		

04D NEEDLE BAR D

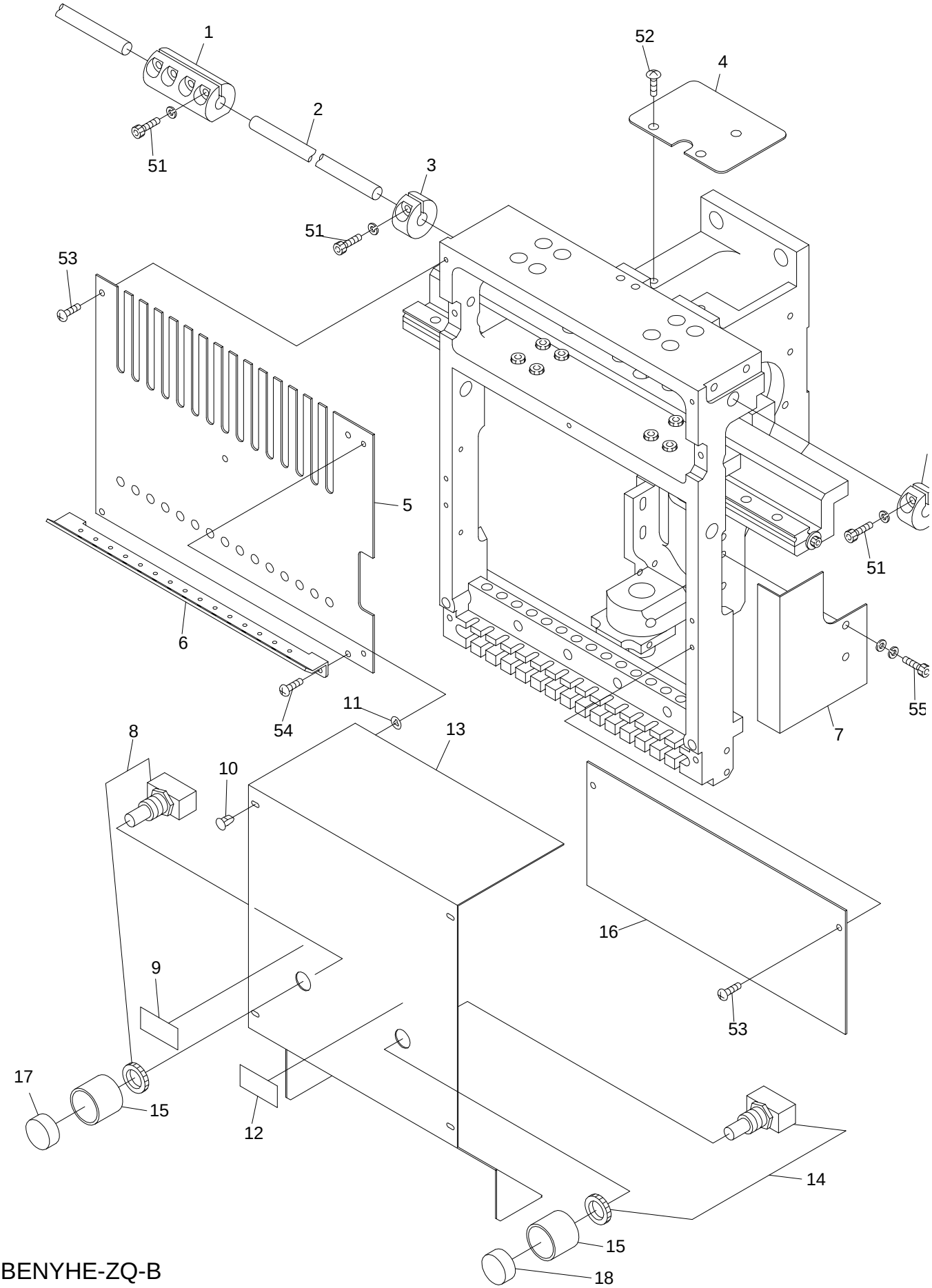

BENYHE-ZQ-B
BENBHE-ZQ-B

04D Needle Bar D

(H=Head Qty.)

ITEM	LIST NO.	DESCRIPTION	QTY	NOTE
1.	KX330010	Rod Joint	2	
2.	A100276	Connecting Rod (8mm x 900mm)	2	
3.	KX230240	Needle Change Collar (ZN)	Hx2	
4.	RD250180	Arm Top Cover	Hx1	
	RV250070	Arm Top Cover (ZQ5)		
5.	RD250010	Front Cover, Upper	H-2	
	RD250020	Front Cover, Upper (First Head)	1	
	RD250030	Front Cover, Upper (Last Head)	1	
6.	RD240271	Thread Hanger, ZQ (with Ceramic)	Hx1	
7.	RD250070	Side Cover (Right)	Hx1	First Head
8.	A9052080	Push Button Switch (Green)	2	
9.	A9019009	Start Switch Label	2	
10.	A9014154	Canoe Clip (TL-180-2)	6xH-4	
11.	A9014155	Washer (TM-147-1)	6xH-4	
12.	A9019003	Stop Switch Label	2	
13.	RA130280	Cover Between Heads (520)	1	4 Head
	RA130250	Cover Between Heads (380)	3	6 Head
	RQ250000	Cover Between Heads (on /off switch) (520)	2	4 Head
	RQ250010	Cover Between Heads (on /off switch) (380)	2	6 Head
14.	A9052081	Push Button Switch (Red)	2	
15.	A110004	Switch Bezel	2	
16.	RD250040	Front Cover, Lower	Hx1	
17.	B250011	Green Button		
18.	B250010	Red Button		
51.		Hex Socket Bolt M4 x 16 (with Spring Washer)		
52.		Hex Socket Truss Head Screw M5 x 6		
53.		Phillips Pan Head Screw M3 x 6		
54.		Phillips Pan Head Screw M3 x 8		
55.		Hex Socket Bolt M4 x 5		

05 JUMP

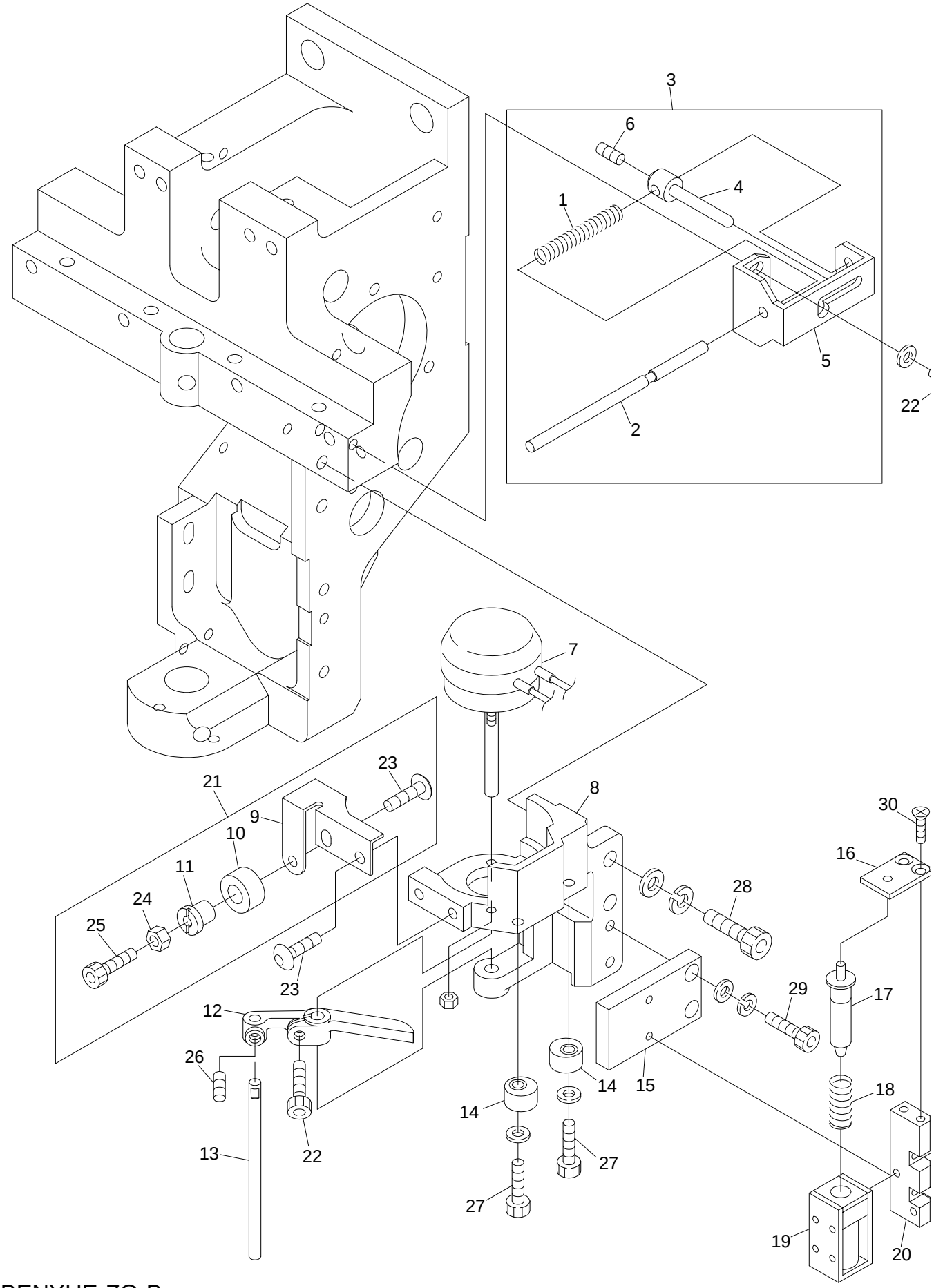

BENYHE-ZQ-B
BENBHE-ZQ-B

05 Jump

(H=Head Qty.)

ITEM	LIST NO.	DESCRIPTION	QTY	NOTE
1.	HB240110	Cancel Return Spring	Hx1	
2.	HT240570	Cancel Rod	Hx1	
3.	HT240760	Manual Cancel Assembly	Hx1	
4.	HT240580	Manual Cancel Pin	Hx1	
5.	HT240590	Cancel Bracket	Hx1	
6.		Hex Socket Set Screw M4 x 4 (Flat Point)	Hx1	
7.	A9056027	Rotary Solenoid, Jump (M960372R)(ETL)	Hx1	
8.	RD230250	Jump Solenoid Fixing Bracket	Hx1	
9.	RD230191	Needle Bar Stopper Fixing Bracket (BEMAX)	Hx1	
10.	HT230220	Needle Bar Stopper	Hx1	
11.	HT230620	Needle Bar Stopper Fixing Pin	Hx1	
12.	HB240020	Jump Solenoid Lever	Hx1	
13.	HB240030	Jump Solenoid Lever Pin	Hx1	
14.	HB240041	Jump Eccentric	Hx2	
15.	RD230210	Keep Solenoid Fixing Plate	Hx1	
16.	RD230220	Plunger Guide	Hx1	
17.	HB560080	Solenoid Plunger Assembly	Hx1	
18.	HB560060	Keep Solenoid Spring	Hx1	
19.	HB560072	Cancel Solenoid (TDS-K07A 24V)	Hx1	
20.	HB560020	Keep Solenoid Fixing Block	Hx1	
21.	RD230340	Needle Bar Stopper Assembly (BEMAX)	Hx1	
22.		Hex Socket Bolt M4 x 8		
23.		Hex Socket Button Head Bolt M4 x 8		
24.		Hex Nut M4		
25.		Hex Socket Bolt M4 x 10		
26.		Hex Socket Set Screw M4 x 4 (with Adhesion)		
27.		Hex Socket Bolt M4 x 12 (with Washer)		
28.		Hex Socket Bolt M5 x 18		
29.		Hex Socket Bolt M4 x 12		
30.		Hex Socket Flat Head Screw M3 x 8		
31.		Hex Socket Bolt M2.6 x 6		
32.		Hex Socket Bolt M3 x 12		

06A THREAD GUIDE A (STANDARD)

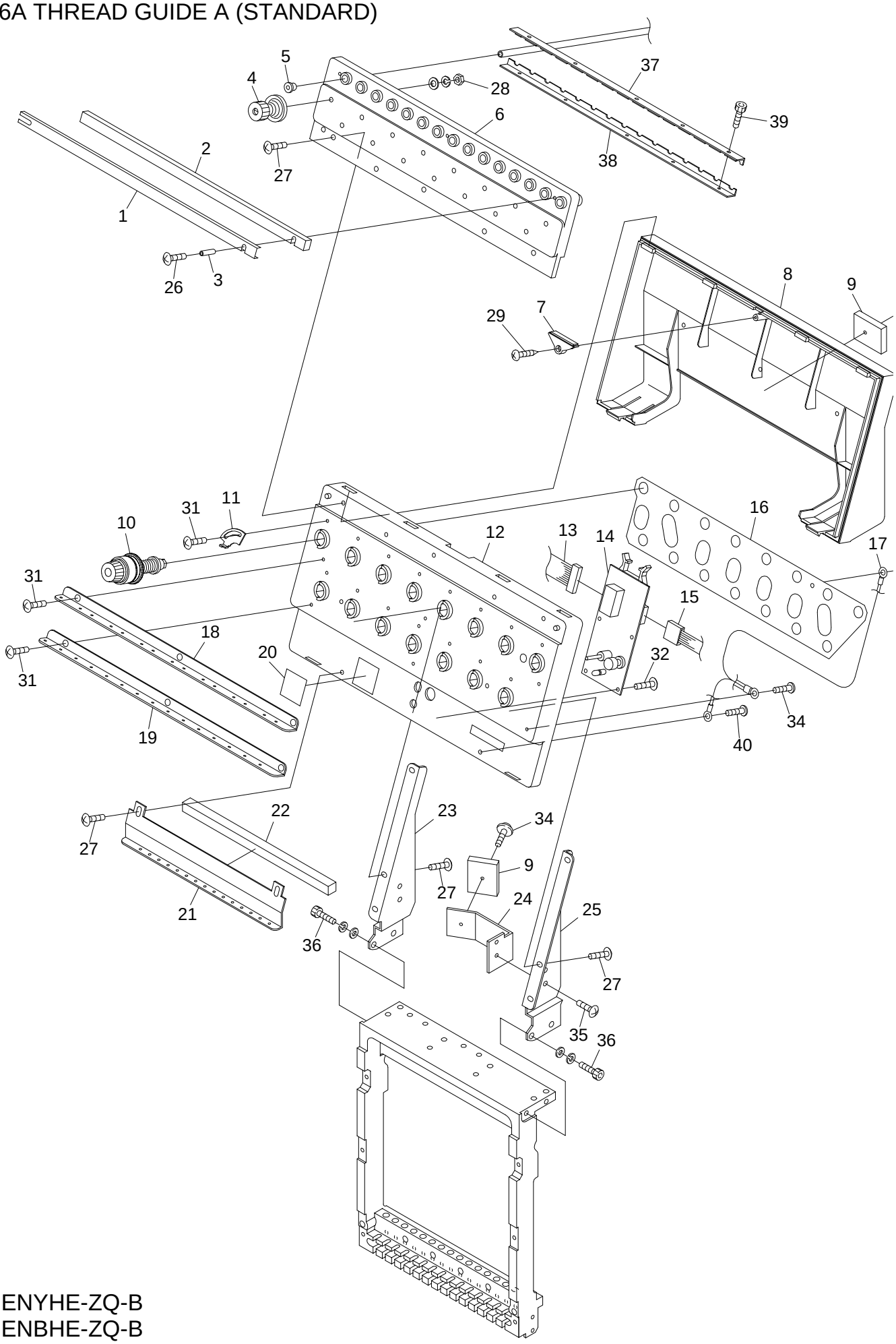

BENYHE-ZQ-B
BENBHE-ZQ-B

06A Thread Guide A (Standard)

(H=Head Qty.)

ITEM	LIST NO.	DESCRIPTION	QTY	NOTE
1.	RD240291	Felt Frame	Hx1	
2.	RD240301	Felt	Hx1	
3.	A9012412	Spacer (3.0 Dia. x 17.0)	Hx2	
4.	RD240320	First Thread Tension Assembly (ZQ-A)	Hx15	
5.	HT240480	Thread Guide Eyelet (White)	Hx15	
6.	RD240280	Thread Tension Base	Hx1	
7.	HT240240	Blind Cap	Hx1	
8.	RD240030	Tension Base Cover	Hx1	
9.	A9068032	Clamp (FCW-26)	Hx2	
10.	RD240153	Dial Thread Tension Unit Complete (BEMAX)	Hx15	
11.	RD240111	Thread Spring Adjusting Plate	Hx15	
12.	RD240022	Tension Base Case Assembly	Hx1	
13.	EBY01690	H1899 Cable	Hx1	
14.	EBY01940	4640 Head Switch Board with Cable (BEMAX)	Hx1	
15.	EBY01700	H1900 Additional Cable	Hx1	
16.	RD240121	Tension Ground Plate	Hx1	
17.	A9053077	Tension Base Ground Cable (ZQ)	Hx1	
18.	RD240330	First Thread Guide Plate (ZQ-A)	Hx1	
19.	RD240340	Second Thread Guide Plate (ZQ-A)	Hx1	
20.		Number Label	Hx1	
21.	RD240051	Second Thread Guide	Hx1	
22.	RD240130	Sponge Rubber	Hx1	
23.	RD240171	Tension Base Mounting Bracket (L)	Hx1	
24.	RD240090	Cable Holder	Hx1	
25.	RD240181	Tension Base Mounting Bracket (R)	Hx1	
26.		Phillips Truss Head Screw M3 x 25		
27.		Phillips Truss Head Screw M4 x 10		
28.		Hex Nut (SM11/64-40)		
29.		Tapping Screw M3 x 12		
30.		Tapping Pan Head Screw M3 x 25		
31.		Phillips Truss Head Screw M3 x 5		
32.		Phillips Truss Head Screw M3 x 6		
33.		Philips Pan Head Screw M3 x 6		
34.		Philips Pan Head Screw (w/ Washer) M3 x 6		
35.		Phillips Truss Head Screw M4 x 6		
36.		Hex Socket Bolt M5 x 16		
37.	RD240430	Tube Holder (Upper)	Hx1	
38.	RD240440	Tube Holder (Lower)	Hx1	
39.		Hex Socket Bolt M3 x 15		
40.		Phillips Pan Head Screw M4 x 6		

06B THREAD GUIDE B (UTSM)

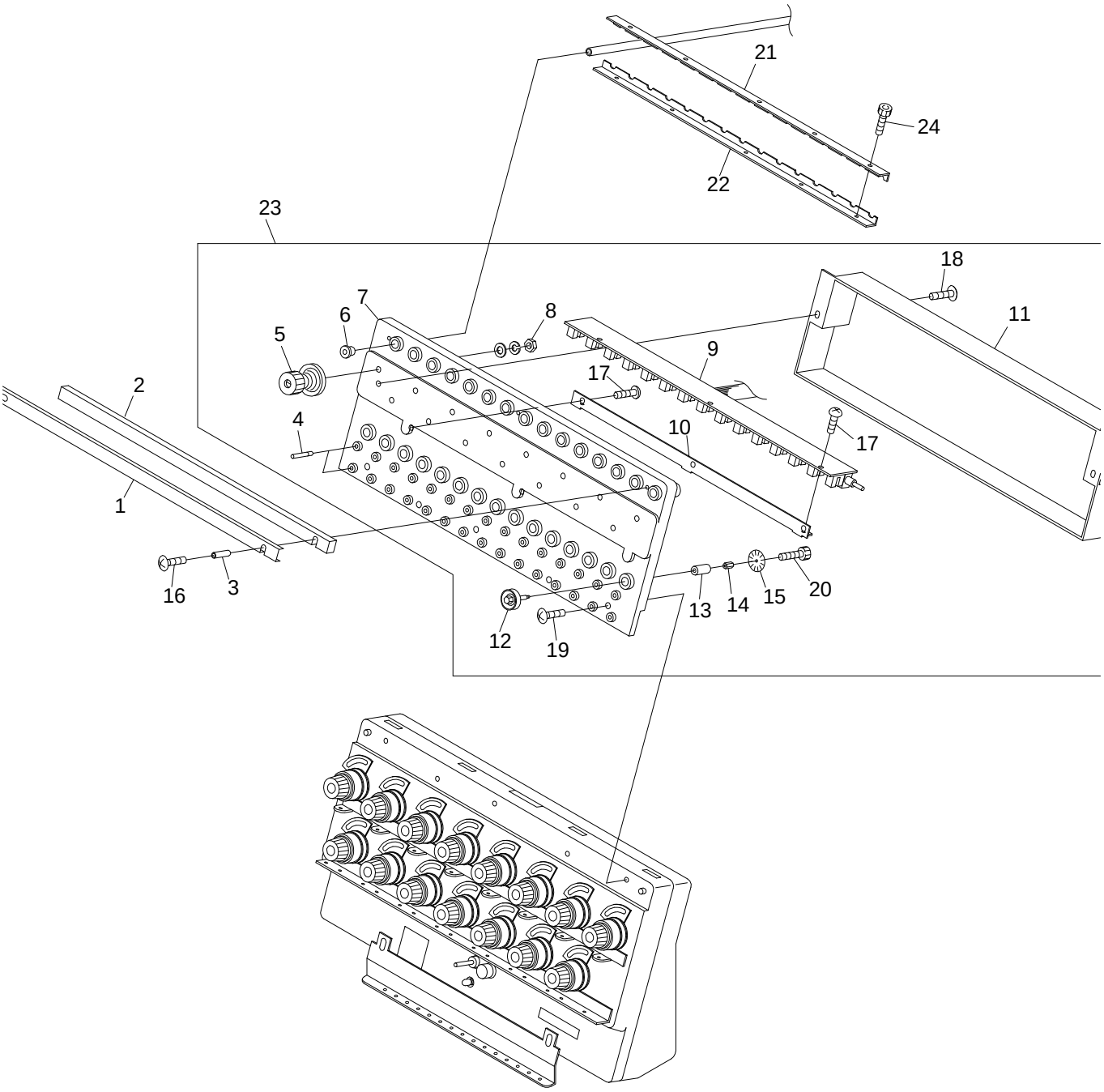

BENYHE-ZQ-B
BENBHE-ZQ-B

06B Thread Guide B (UTSM)

(H=Head Qty.)

ITEM	LIST NO.	DESCRIPTION	QTY	NOTE
1.	RD240291	Felt Frame	Hx1	
2.	RD240301	Felt	Hx1	
3.	A9012412	Spacer (3.0 Dia. x 17.0)	Hx2	
4.	HT240300	Thread Guide Pin	Hx30	
5.	RD240320	First Thread Tension Assembly (ZQ-A)	Hx15	
6.	HT240480	Thread Guide Eyelet (White)	Hx15	
7.	RD540010	UTSM Base	Hx1	
8.		Hex Nut (SM11/64-40)		
9.	EBY01720	4680 UTSM Board with Cable	Hx1	
10.	RD540060	UTSM Board Bracket	Hx1	
11.	RD540050	UTSM Board Cover	Hx1	
12.	HT240290	Tension Wheel	Hx15	
13.	HT240310	Tension Wheel Bearing	Hx15	
14.	KN540510	Tension Wheel Nut	Hx15	
15.	HT240100	UTSM Disk (YN)	Hx15	
16.		Truss Screw M3×25		
17.		Pan Screw M3×6		
18.		Truss Screw M3×6		
19.		Truss Screw M4×10		
20.		Hex Socket Bolt M2×3		
21.	RD240430	Tube Holder (Upper)	Hx1	
22.	RD240440	Tube Holder (Lower)	Hx1	
23.	RD540090	UTSM Assembly (ZQ)	Hx1	
24.		Hex Socket Bolt M3×15		

07A COLOR CHANGE A

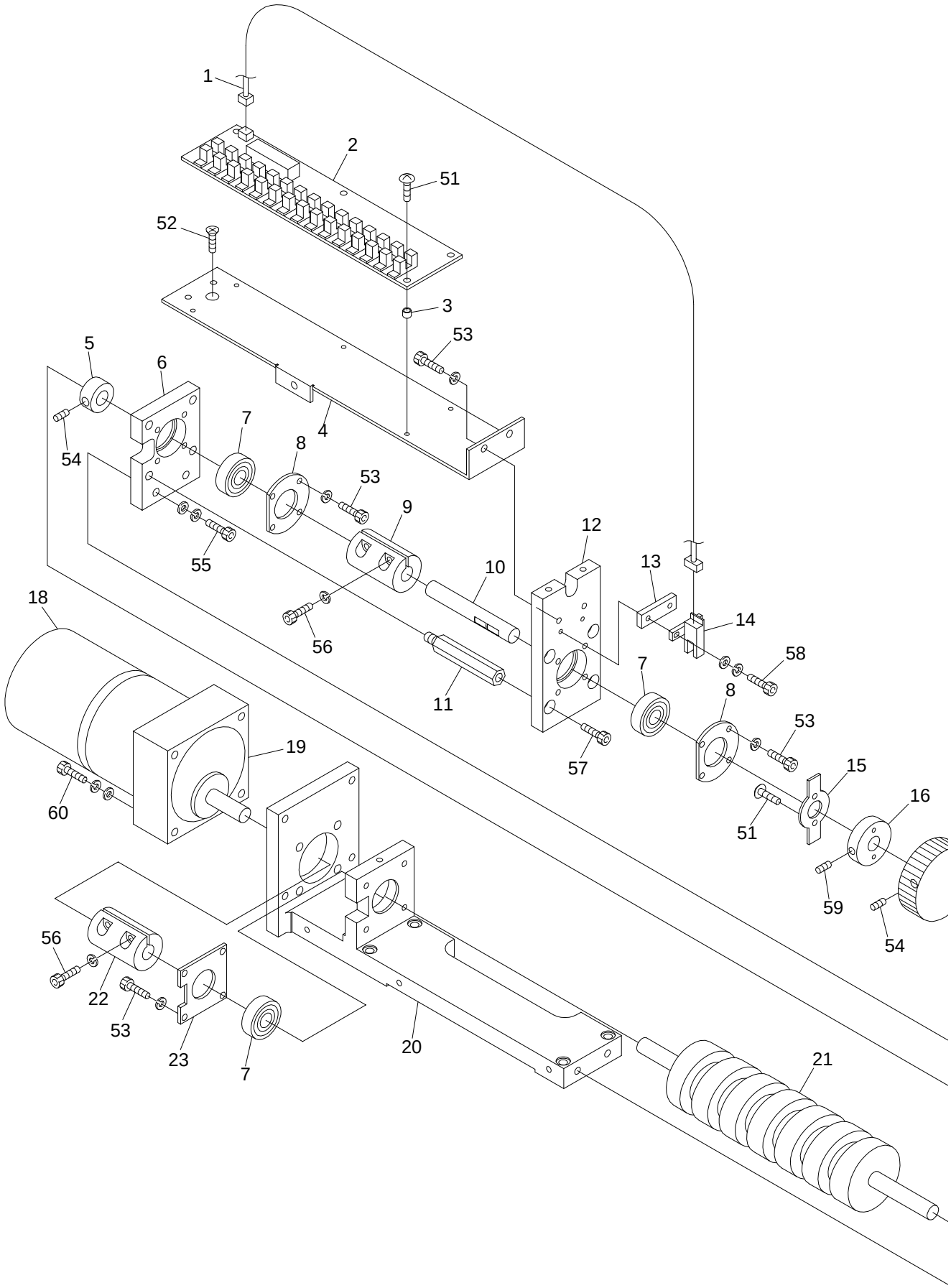

BENYHE-ZQ-B
BENBHE-ZQ-B

07A Color Change A

ITEM	LIST NO.	DESCRIPTION	QTY	NOTE
1.	A9053079	Lock Sensor Cable (ZN/ZQ)	1	
2.	EBY01650	3772 Color Change Board (ZQ)	1	
3.	A9012208	Spacer, Roll Bushing (5.0 Dia. × 4.0)	5	
4.	RQ330030	Color Change Board Base Plate	1	
5.	KX330120	Bearing Collar	1	
6.	LA330060	Color Change Side Plate (ZQ-A)	1	
7.	A9010062	Bearing (6000ZZ)	3	
8.	RD330070	Bearing Plate (2)	2	
9.	RD330020	Motor Coupling	1	
10.	RD330040	Connecting Shaft	1	
11.	RD330050	Stud Bolt	4	
12.	RD330121	Color Change Top Plate	1	
13.	KX330250	Sensor Spacer	1	
14.	A9060063	Micro Sensor (EE-SX672A Omron)	1	
15.	KX330271	Lock Sensor Dock	1	
16.	KC330170	Detection Plate Collar	1	
17.	KC330130	Manual Knob	1	
18.	A9065092	Reversible Color Change Motor (3RJ10GB-AUL-E4)	1	
19.	A9065093	Gear Head (3GB18K)	1	
20.	RQ330010	Color Change Base	1	
21.	RD330150	Color Change Cam	1	
22.	RD330030	Coupling	1	
23.	RD330060	Bearing Plate (1)	1	
51.		Phillips Truss Head Truss Screw M3×8		
52.		Hex Socket Flat Head Screw M4×6		
53.		Hex Socket Bolt M4×10		
54.		Hex Socket Set Screw M6×6		
55.		Hex Socket Bolt M5×25		
56.		Hex Socket Bolt M4×15		
57.		Hex Socket Bolt M5×15		
58.		Hex Socket Bolt M3×16		
59.		Hex Socket Set Screw M5×10		
60.		Hex Socket Bolt M4×60		

07B COLOR CHANGE B

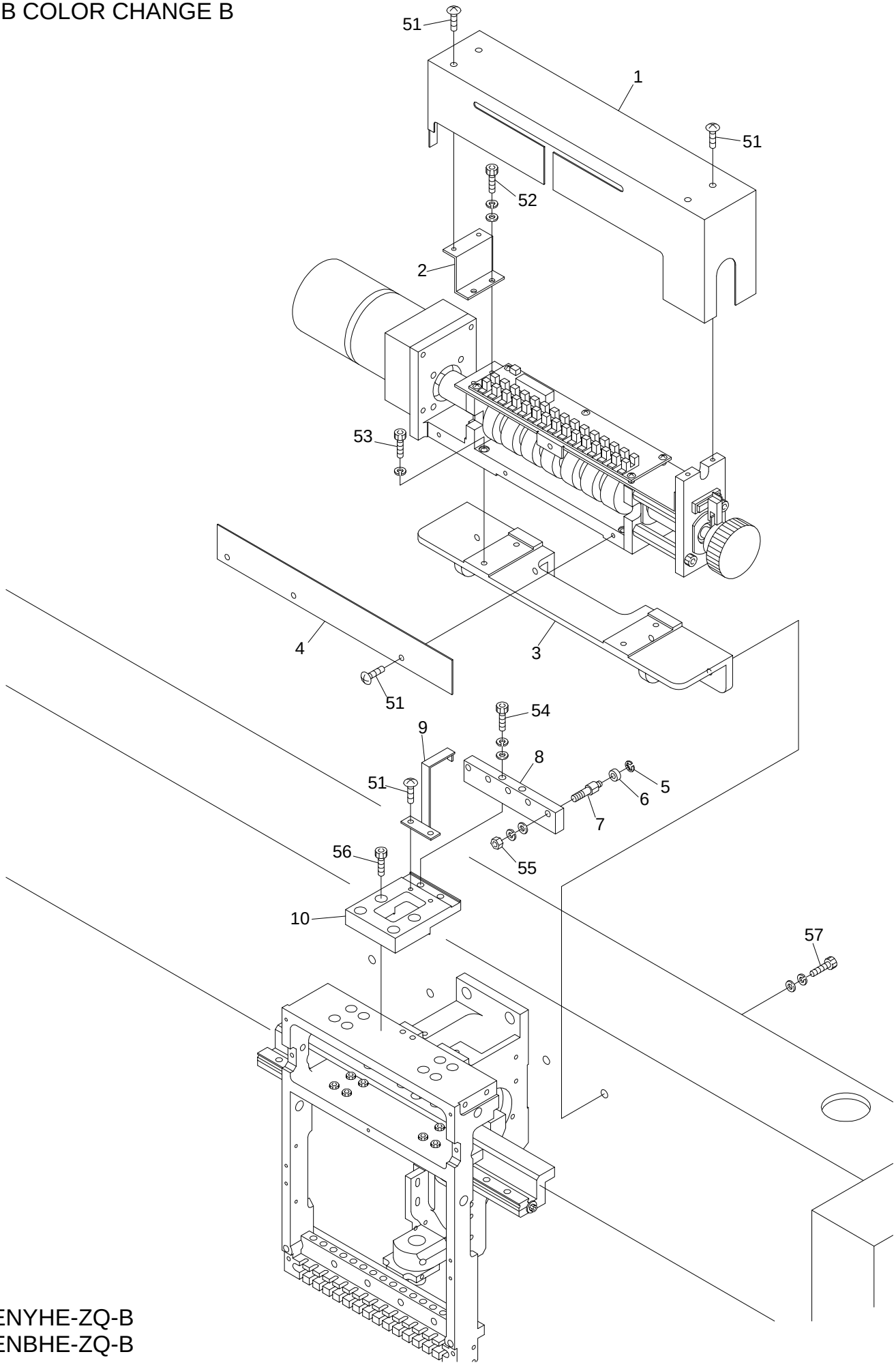

BENYHE-ZQ-B
BENBHE-ZQ-B

07B Color Change B

ITEM	LIST NO.	DESCRIPTION	QTY	NOTE
1.	RQ330050	Color Change Cover	1	
2.	RA330290	Cover Fixing Bracket	1	
3.	RQ330070	Color Change Fixing Bracket	1	
4.	RQ330060	Color Change Cover, Front	1	
5.	A9012127	E-Ring (3.0 Dia.)	4	
6.	A9010063	Roller Bearing (MR105ZZ NSK)	4	
7.	LA330110	Connecting Collar Shaft	4	
8.	RD330100	Connecting Block	4	
9.	RQ330040	Needle Position Sensor Dock (ZQ-B)	1	
10.	RQ330020	Color Change Roller Base	1	
51.		Truss Screw M4×6		
52.		Hex Socket Bolt M4×10		
53.		Hex Socket Bolt M5×25		
54.		Hex Socket Bolt M6×30		
55.		Hex Nut M6		
56.		Hex Socket Bolt M5×18		
57.		Hex Socket Bolt M6×20		

08A DRIVE A

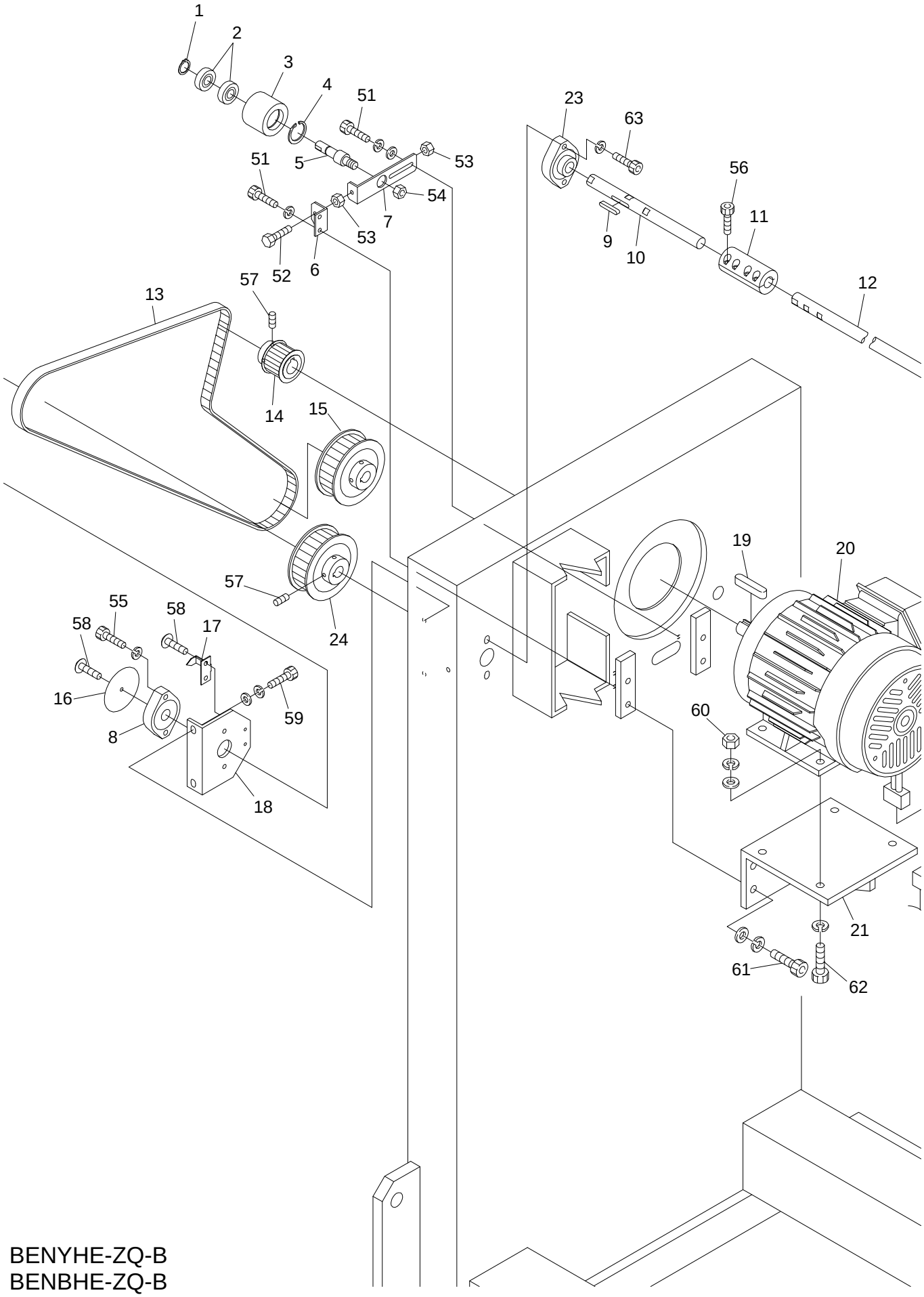

BENYHE-ZQ-B
BENBHE-ZQ-B

08A Drive A

ITEM	LIST NO.	DESCRIPTION	QTY	NOTE
1.	A9012066	C-Ring (12.0 Dia.)	1	
2.	A9010003	Bearing (6001ZZ)	2	
3.	RQ310000	Idler	1	
4.	A9012063	C-Ring (28.0 Dia.)	1	
5.	RQ310010	Idler Pulley Shaft	1	
6.	RQ310020	Tension Adjuster Bracket	1	
7.	HM310070	Tension Adjuster	1	
8.	HP321140	Upper Connecting Collar Bearing	1	
9.	HX310110	Upper Shaft Key (5×5×30)	1	
10.	RQ310070	Upper Shaft (NYHE-B)	1	
	RY310000	Keyed Shaft, Upper (20 Dia. x 190 L) (ZQ5)	1	
11.	HH320550	Arm Shaft Connecting Coupling	1	
	A9013069	Arm Shaft Coupling (N-20-20) (ZQ5)	1	
12.	RQ310110	Lower Connecting Shaft (520)	1	4 Head
	RQ310120	Lower Connecting Shaft (380)	1	6 Head
	RY310010	Main Shaft (20 Dia. x 2130 L) (ZQ5)	1	
13.	A9020180	Timing Belt (B250S5M1420)	1	
14.	HX310040	Timing Pulley B	1	
15.	HX310030	Timing Pulley A	1	
16.	HM310251	Angle Display Plate	1	
17.	HX310090	Angle Indicator (ZQ-B)	1	
18.	RQ310030	Bearing Bracket A	1	
19.	HU315290	Main Motor Shaft Key	1	
20.	HV310220	Main Motor (1K FBK8-4P-0.55kw VF3 200V) (ETL)	1	
21.	RA310100	Motor Bracket	1	
22.	A9053081	Motor Cable (1.25×4×5m)	1	
23.	HP321140	Upper Connecting Collar Bearing	1	
	A9011240	Upper Shaft Support Bearing (UCFL 204) (ZQ5)	1	
24.	HX310030	Timing Pulley A	1	
	RX310000	Timing Pulley A (ZQ5)	1	
51.		Hex Socket Bolt M5×10 (Black)		
52.		Hex Socket Bolt M5×30 (Black)		
53.		Hex Nut M5		
54.		Hex Nut M10		
55.		Hex Socket Bolt M6×20 (Black)		
56.		Hex Socket Bolt M5×20		
57.		Hex Socket Set Screw M5×6		
58.		Phillips Truss Head Screw M4×6		
59.		Hex Socket Bolt M6×16 (Black)		
60.		Hex Nut M8		
61.		Hex Socket Bolt M8×25		
62.		Hex Socket Bolt M8×35		
63.		Hex Socket Bolt M6×30		
		Hex Socket Bolt M8×25 (ZQ5)		

08B DRIVE B

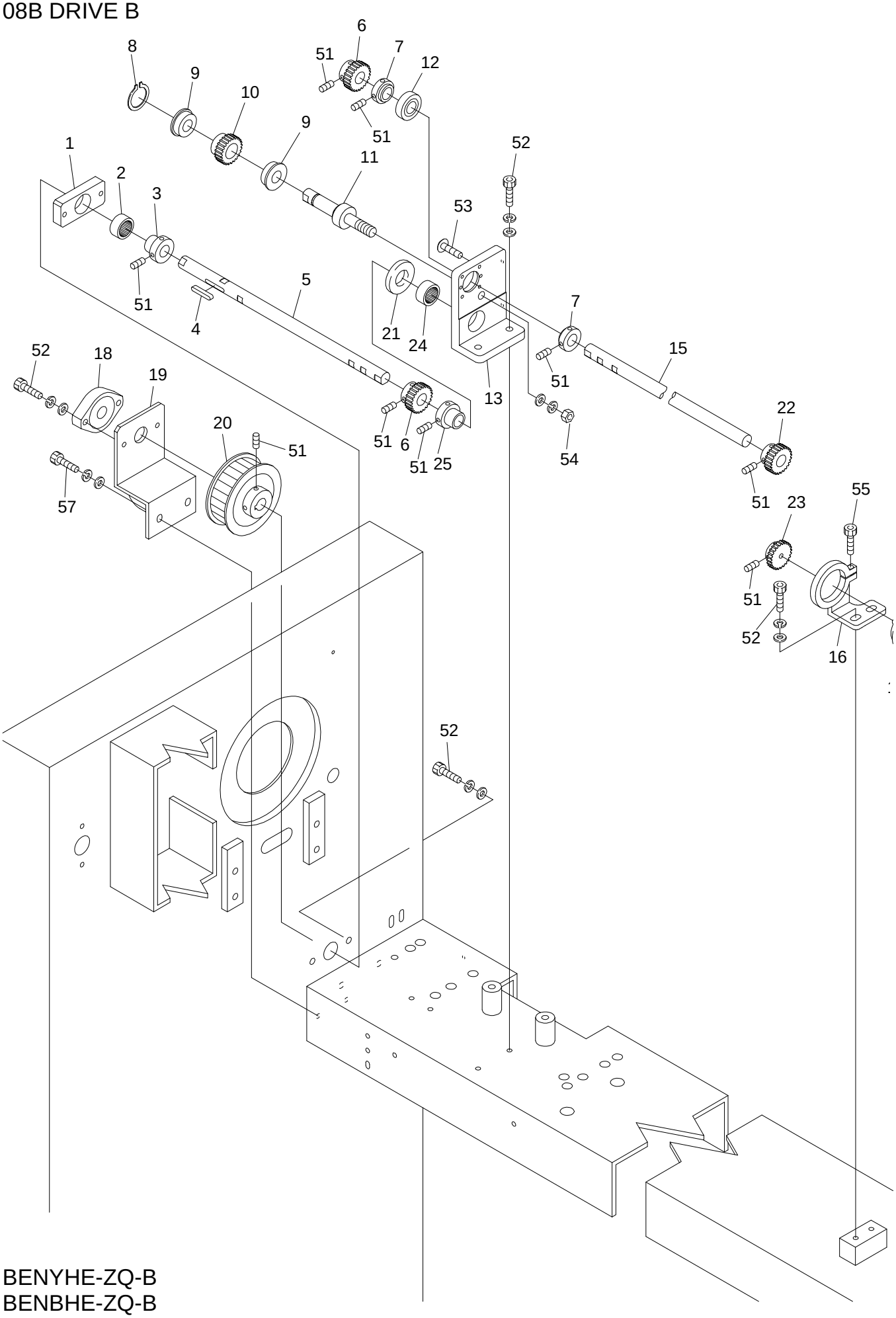

BENYHE-ZQ-B
BENBHE-ZQ-B

08B Drive B

ITEM	LIST NO.	DESCRIPTION	QTY	NOTE
1.	RQ310050	Shaft Support Plate (Lower Shaft)	1	
2.	A9011111	Needle Bearing (TLA-2012Z)	1	
3.	HP321090	Lower Connecting Shaft Collar	1	
4.	HX310110	Upper Shaft Key (5×5×30)	1	
5.	RQ310100	Lower Shaft (Pulley A)	1	
6.	RA310310	Spur Gear	2	
7.	RQ310150	Bearing Fixing Collar	2	
8.	A9012061	C-Ring (10.0 Dia.)	1	
9.	A9010066	Bearing (LF-1910ZZ)	2	
10.	RA310321	Idler Spur Gear (Metal)	1	
11.	RA310330	Idler Shaft	1	
12.	A9010007	Bearing (6002ZZ)	1	
13.	RQ310130	Bearing Bracket	1	Small Hook
	RQ310131	Bearing Bracket (ZQ5)	1	
	RQ310160	Bearing Bracket (ZQ5)	1	Medium Hook
14.				
15.	RQ310110	Lower Connecting Shaft (520)	1	4 Head
	RQ310120	Lower Connecting Shaft (380)	1	6 Head
16.	HP331923	Encoder Support	1	
17.	KN511020	Position Encoder (051)	1	
18.	HP321140	Upper Connecting Bearing Collar	1	
19.	RQ310040	Bearing Bracket B (Lower Shaft)	1	
20.	HX310030	Timing Pulley A	1	
21.	A9012156	Thrust Washer (70W-2015) (ZQ5)	1	
22.	HP321710	Encoder Driving Gear No.1	1	
23.	HP321720	Encoder Driving Gear No.2	1	
24.	A9011111	Needle Bearing (TLA-2012Z)	1	
	A9010007	Bearing (6002ZZ) (ZQ5)	1	
25.	HP321090	Lower Connecting Shaft Collar	1	
	RQ310150	Bearing Fixing Collar (ZQ5)	1	
51.		Hex Socket Set Screw M5×6		
52.		Hex Socket Bolt (Black) M6×20		
53.		Phillips Truss Screw M4×6		
54.		Hex Nut M8		
55.		Hex Socket Bolt M4×18		

10A PANTOGRAPH DRIVE A

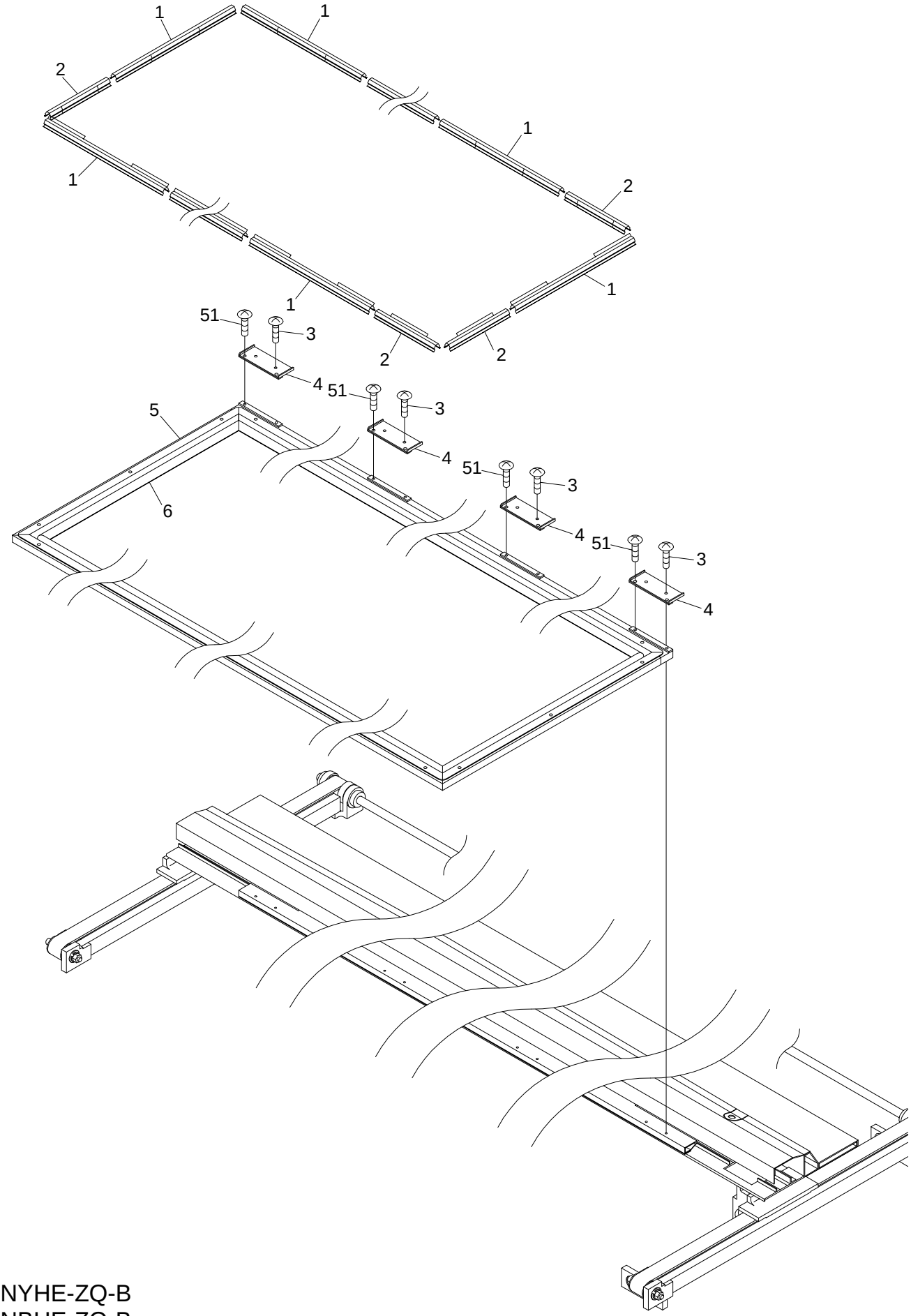

BENYHE-ZQ-B
BENBHE-ZQ-B

10A Pantograph Drive A

ITEM	LIST NO.	DESCRIPTION	QTY	NOTE
1.	KF730750	Portal Clip (300L)	14	4 Head
			16	6 Head
2.	KF730760	Portal Clip (150L)	4	
3.	KF730500	Phillips Truss Screw (SM11/64-40×10.5)	8	
4.	RQ480250	Pantograph Fixing Plate	4	
5.	RQ730001	Pantograph Frame Assembly (520)	1	NYHE-B04
	RQ730022	Pantograph Frame Assembly (380)	1	NYHE-B06
6.	RQ730011	Pantograph Assembly (520)	1	NYHE-B04
	RQ730032	Pantograph Assembly (380)	1	NYHE-B06
51.		Phillips Truss Head Screw M4×10	16	

10B-1 PANTOGRAPH DRIVE B-1

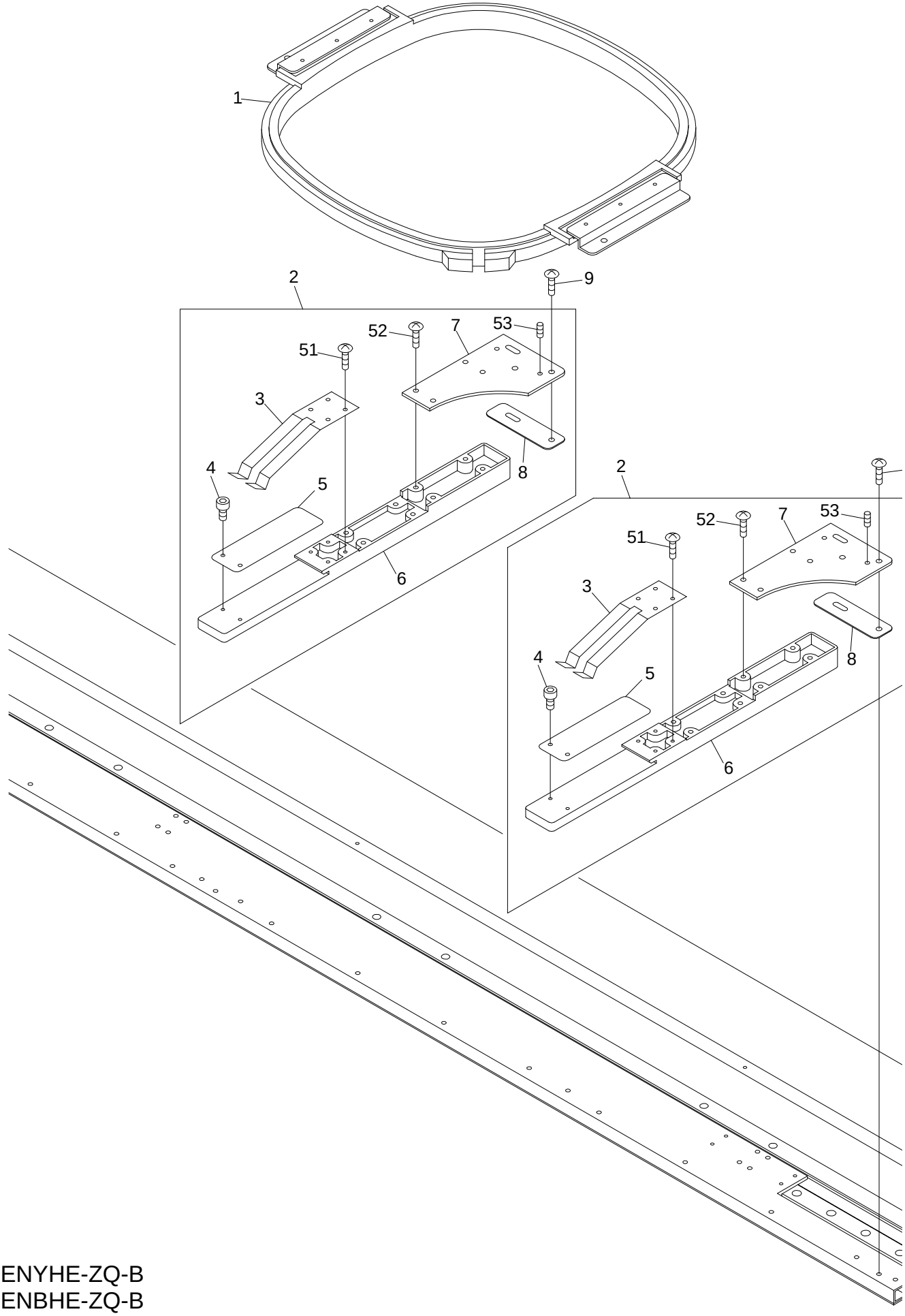

BENYHE-ZQ-B
BENBHE-ZQ-B

10B-1 Pantograph Drive B-1

(H = Head Qty.)

ITEM	LIST NO.	DESCRIPTION	QTY	NOTE
1.	FR92460434A520A	Blue Hoop Frame Assembly (460×434)	Hx1	4 Head
	FR92300290A380A	Blue Hoop Frame Assembly (300×290)	Hx1	6 Head
2.	LA730680	Pantograph Arm Stay Assembly	H+1	
3.	LA730650	Pantograph Arm Hold Spring	H+1	
4.	LA730610	Positioning Pin	Hx2+2	
5.	LA730630	Slide Plate	H+1	
6.	LA730590	Pantograph Arm Stay Base	H+1	
7.	LA730620	Pantograph Arm Bracket	H+1	
8.	LA730640	Pantograph Arm Spacer	H+1	
9.	KF730500	Phillips Truss Screw (SM11/64-40×10.5)	Hx2+2	
51.		Truss Screw M3x10		
52.		Truss Screw M4x10		
53.		Hex Socket Set Screw M4x6		

10B-2 PANTOGRAPH DRIVE B-2

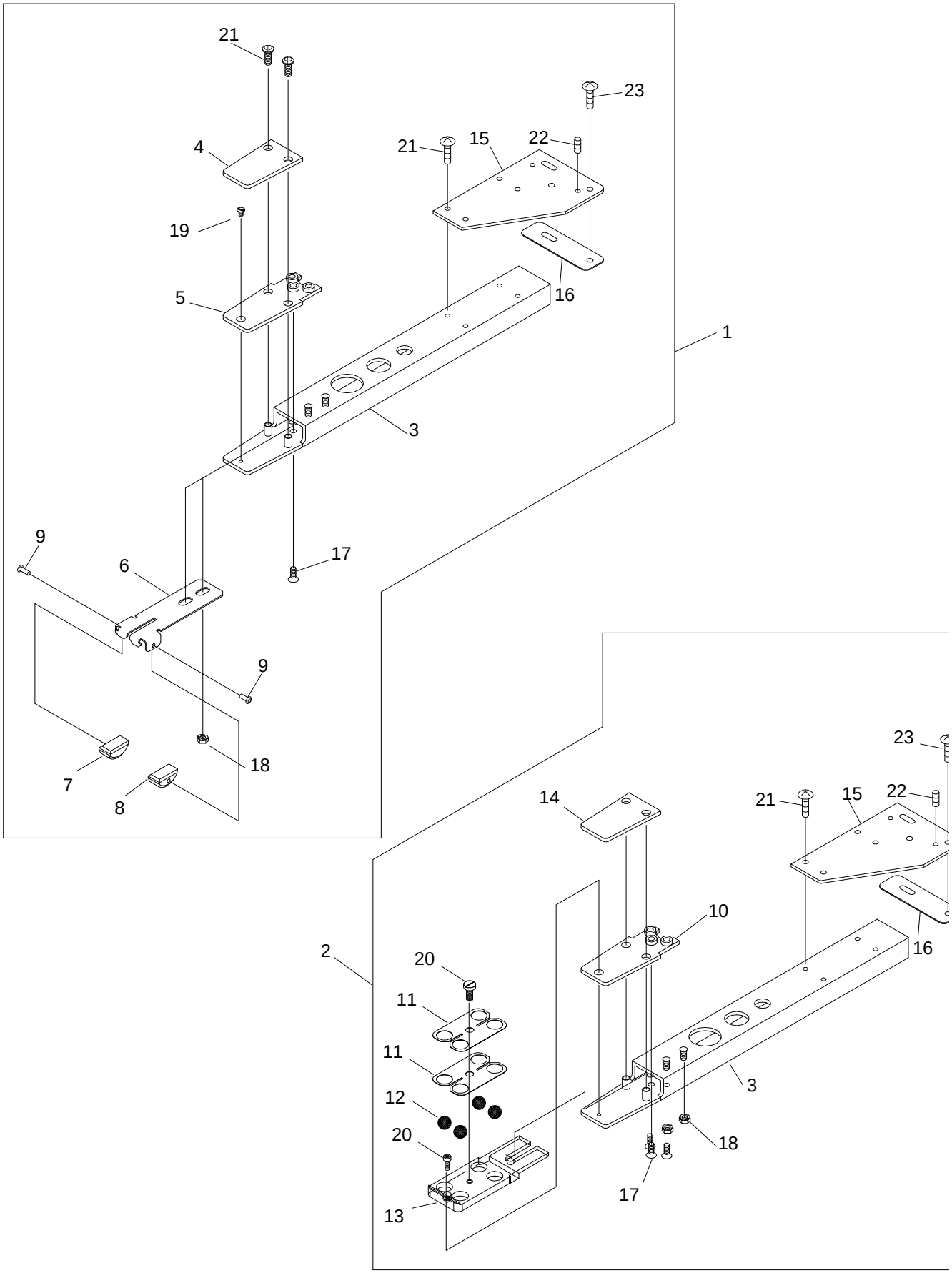

BENYHE-ZQ-B
BENBHE-ZQ-B

10B-2 Pantograph Drive B-2

ITEM	LIST NO.	DESCRIPTION	QTY	NOTE
1.	A100520	Hoop Support Arm Assembly (ZQ-B)	1	(Spring Type)
2.	A100521	Hoop Support Arm Assembly (ZQ-B)	1	(Ball Type)
3.	A100533	Hoop Support Arm Base	1	
4.	A200093	Nylon Tongue	1	
5.	A100107	Steel Tongue	1	
6.	A100108	Clamp, Hoop Support	1	
7.	A200158	Button, Right Hoop Support	1	
8.	A200159	Button, Left Hoop Support	1	
9.	A200167	Rivet, Hoop Support Button	1	
10.	A100376	Ball Clip Steel Plate	1	
11.	A100372	Ball Clip Stainless Spring	2	
12.	A100373	Ball Clip 1/2" Steel Ball	4	
13.	A100374	Ball Clip Aluminum Ball Holder	1	
14.	A100375	Ball Clip Nylon Wear Plate	1	
15.	A100534	Plate, Hoop Arm Attaching	1	
16.	A100526	Tubular Arm Plate (NYHE)	1	
17.		Screw, 8-32 x ¼ Flat Head		
18.		Nut, 10-32 (KEPS)		
19.		Phillips Undercut Flat Head Screw, 6-32x3/16		
20.		Hex Socket Cap Screw, 6-32 x ½		
21.		Phillips Pan Head Screw, 10-32 x 3/8		
22.		Hex Socket Set Screw M4 x 6		
23.	KF730500	Phillips Truss Screw (SM11/64-40 x 10.5)	10	

10B-3 PANTOGRAPH DRIVE B-3

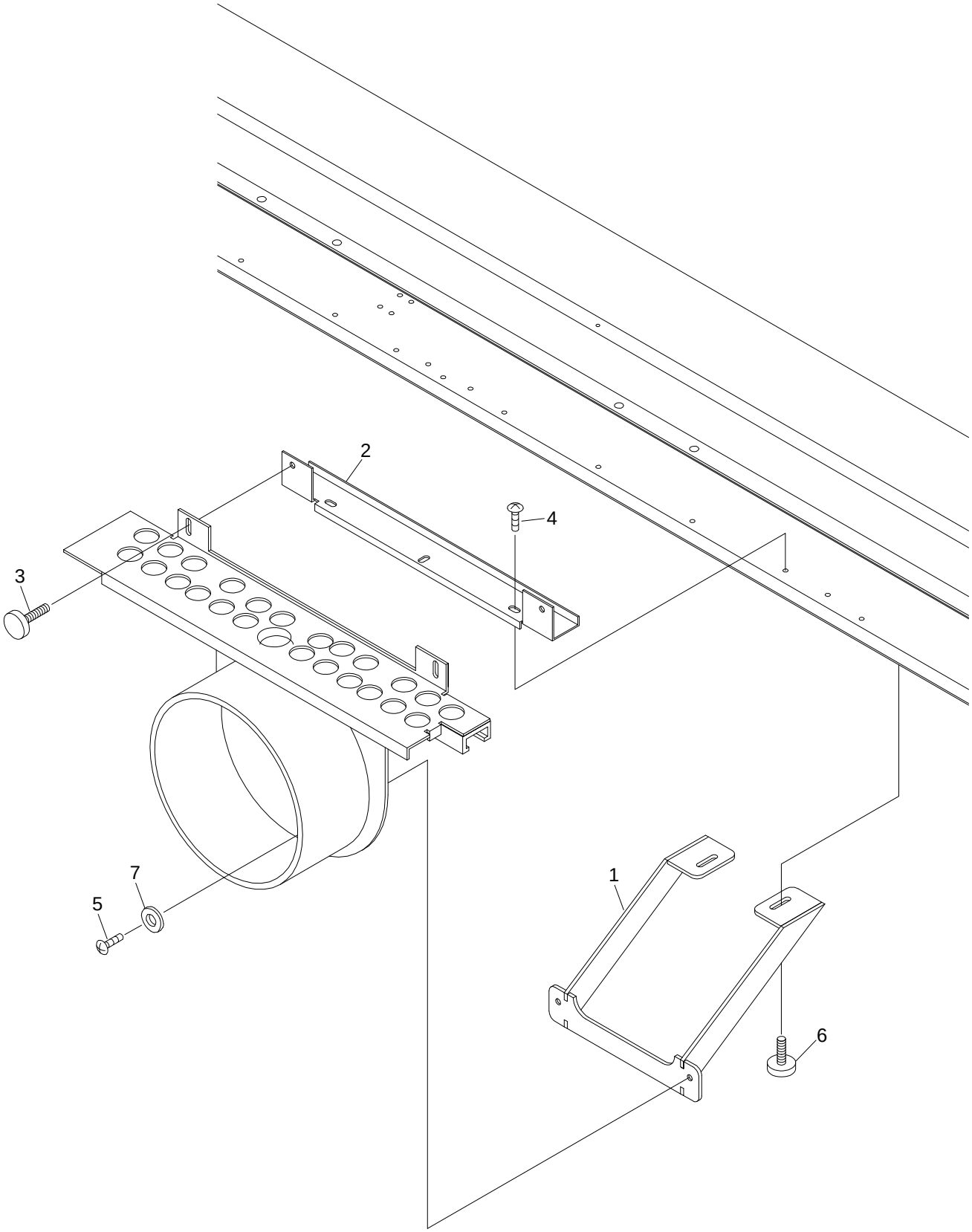

BENYHE-ZQ-B
BENBHE-ZQ-B

10B-3 Pantograph Drive B-3

(H=Head Qty.)

ITEM	LIST NO.	DESCRIPTION	QTY	NOTE
1.	A100529	Cap Frame Mounting Bracket	Hx1	
2.	A100530	Cap Frame Adjuster Bracket	Hx1	
3.	P840443	Thumb Screw 10-32 x ½ (Black Knob)	Hx2	
4.	KF730500	Phillips Truss Screw (SM11/64-40 x 10.5)	Hx3	
5.		Phillips Head Screw 10-32x 3/8	Hx2	
6.		Thumb Screw M5x22 (White Knob)	Hx3	
7.		Flat Washer # 10 (Large)	Hx4	

10C PANTOGRAPH DRIVE C

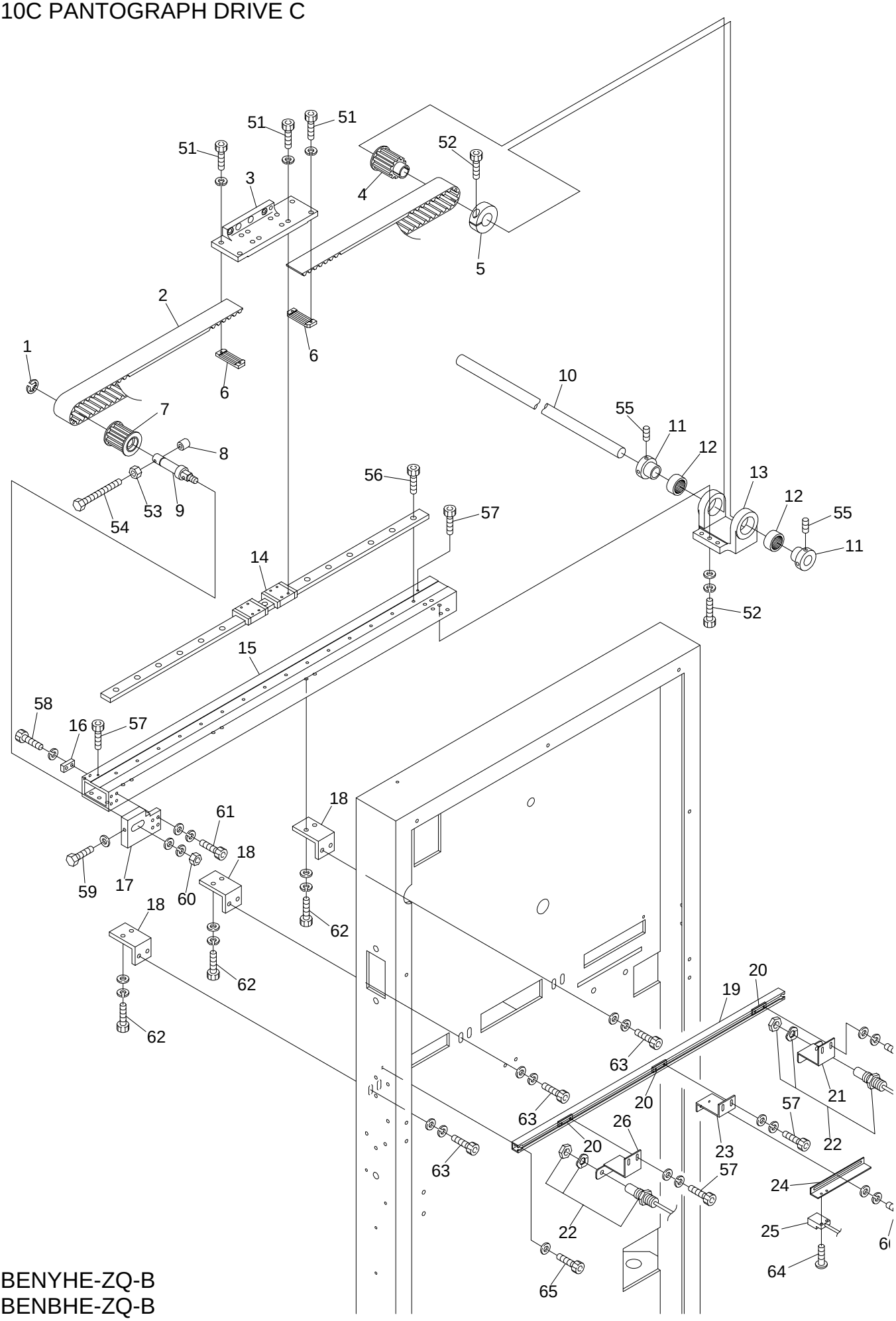

BENYHE-ZQ-B
BENBHE-ZQ-B

10C Pantograph Drive C

(H = Head Qty.)

ITEM	LIST NO.	DESCRIPTION	QTY	NOTE
1.	A9012052	E-Ring (10.0 Dia.)	1	
2.	HV480110	Timing Belt (B300S5M)	1	
3.	RQ480020	H-Guide Slide Bracket (R)	1	
4.	HV480040	Pantograph Drive Pulley (Rear)	1	
5.	HH481980	Clamping Collar (19.0 Dia.)	1	
6.	HP480940	Belt Set Rack	2	
7.	HV480050	Pantograph Drive Pulley (Front)	1	
8.	HH482110	Pulley Shaft Bolt Cap	1	
9.	HM480020	Timing Pulley Shaft (H)	1	
10.	KC320113	H-Motor Shaft (R) (15mm)	1	Cut Product
11.	HP321090	Lower Connecting Shaft Collar	2	
12.	A9011111	Needle Bearing (TLA-2012Z)	2	
13.	RQ480010	H-Guide Rear Pulley Bracket	1	
14.	RA480120	LM-Guide (HRW12LR200M+600LM) (H)	2	
15.	RQ480040	H-Guide Rail Base (R)	1	
16.	RQ480070	Support Plate	1	
17.	RQ480000	H-Guide Front Pulley Bracket	1	
18.	RQ480060	H-Rail Base Fixed Bracket	3	
19.	RQ480120	H-Rail	1	
20.	KU460270	Plate Nut (M3)	3	
21.	RQ480100	Switch Bracket R (H-Side)	1	
22.	A9052079	Limit Switch (RS-001)	2	
23.	RQ480081	Origin Sensor Bracket (H)	1	
24.	RQ480091	Origin Sensor Fixed Stay (H)	1	
25.	A9052084	Origin Sensor (SW-3795)	1	
26.	RQ480110	Switch Bracket L (H-Side)	1	
51.		Hex Socket Bolt M3×10		
52.		Hex Socket Bolt M5×18 (Black)		
53.		Hex Nut M4		
54.		Hex Bolt M4×40		
55.		Hex Socket Set Screw M5×8		
56.		Hex Socket Bolt M4×8 (Black)		
57.		Hex Socket Bolt M3×6 (Black)		
58.		Hex Socket Bolt M4×12 (Black)		
59.		Hex Bolt M4×25		
60.		Hex Nut M8		
61.		Hex Socket Bolt M4×16		
62.		Hex Socket Bolt M5×16		
63.		Hex Socket Bolt M6×16		
64.		Truss Screw M3×10 (Stainless Steel)		
65.		Hex Socket Bolt M4×6		
66.		Hex Socket Bolt M3×6		

10D PANTOGRAPH DRIVE D

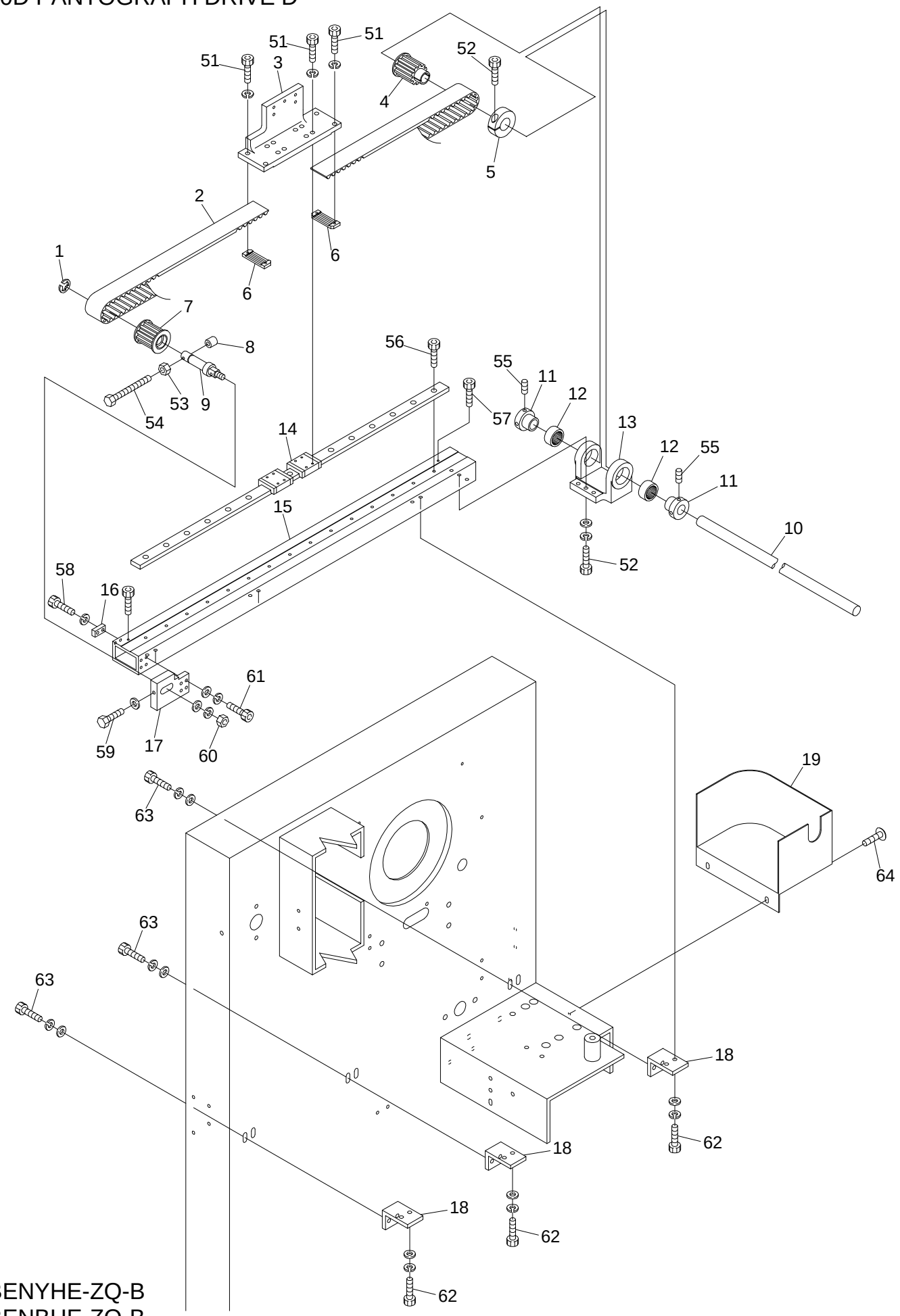

BENYHE-ZQ-B
BENBHE-ZQ-B

10D Pantograph Drive D

(H = Head Qty.)

ITEM	LIST NO.	DESCRIPTION	QTY	NOTE
1.	A9012052	E-Ring (10.0 Dia.)	1	
2.	HV480110	Timing Belt (B300S5M)	1	
3.	RQ480300	H-Guide Slide Bracket (L)	1	
4.	HV480040	Pantograph Drive Pulley (Rear)	1	
5.	HH481980	Clamping Collar (19.0 Dia.)	1	
6.	HP480940	Belt Set Rack	2	
7.	HV480050	Pantograph Drive Pulley (Front)	1	
8.	HH482110	Pulley Shaft Bolt Cap	1	
9.	HM480020	Timing Pulley Shaft (H)	1	
10.	KC320113	H-Motor Shaft (L)	1	Cut Product
11.	HP321090	Lower Connecting Shaft Collar	2	
12.	A9011111	Needle Bearing (TLA-2012Z)	2	
13.	RQ480010	H-Guide Rear Pulley Bracket	1	
14.	RA480120	LM-Guide (HRW12LR200M+600LM) (H)	1	
15.	RQ480050	H-Guide Rail Base (L)	1	
16.	RQ480070	Support Plate	1	
17.	RQ480000	H-Guide Front Pulley Bracket	1	
18.	RQ480060	H-Rail Base Fixed Bracket	3	
19.	RQ480230	Back Cover, Frame	1	
51.		Hex Socket Bolt M3×10		
52.		Hex Socket Bolt M5×18 (Black)		
53.		Hex Nut M4		
54.		Hex Bolt M4×40		
55.		Hex Socket Set Screw M5×8		
56.		Hex Socket Bolt M4×8 (Black)		
57.		Hex Socket Bolt M3×6 (Black)		
58.		Hex Socket Bolt M4×12 (Black)		
59.		Hex Bolt M4×25		
60.		Hex Nut M8		
61.		Hex Socket Bolt M4×16		
62.		Hex Socket Bolt M5×16		
63.		Hex Socket Bolt M6×16		
64.		Phillips Truss Head Screw M4×8		

10E PANTOGRAPH DRIVE E

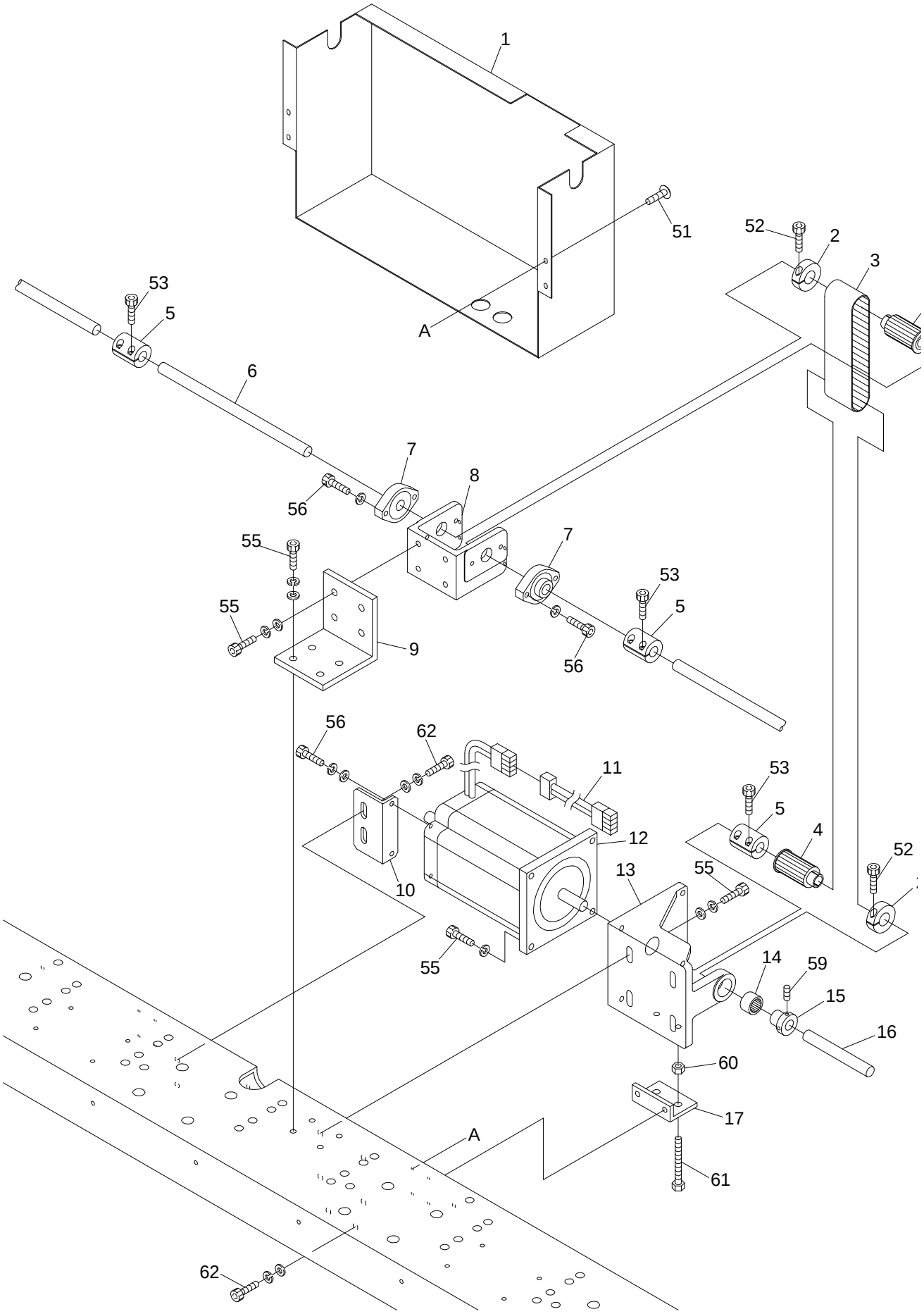

BENYHE-ZQ-B
BENBHE-ZQ-B

10E Pantograph Drive E

ITEM	LIST NO.	DESCRIPTION	QTY	NOTE
1.	RQ480221	H-Pulse Motor Cover	1	
2.	HH481980	Clamping Collar (19.0 Dia.)	2	
3.	A9020190	Timing Belt (500S5M400)	1	
4.	RF480100	Pantograph Drive Pulley, Rear (W=50)	2	
5.	HH481931	Pulse Motor Coupling	3	
6.	KC320113	H-Motor Shaft (Center) (270mm)	1	Cut Product
7.	HP321140	Upper Shaft Connecting Collar Bearing	2	
8.	RQ480211	H-Pulley Bracket	1	
9.	RQ480200	H-Pulley Support Bracket	1	
10.	RQ480180	Pulse Motor Support Bracket	1	
11.	EAY053A0	H2313 Pulse Motor Extension Cable (NY-B)	1	
12.	HV480060	Pulse Motor (TS3560N2)	1	
13.	RQ480170	H-Pulse Motor Bracket	1	
14.	A9001063	Needle Bearing (TLA-2016Z)	1	
15.	HH481970	Pulse Motor Connecting Shaft Collar	1	
16.	KC320113	H-Motor Shaft (117mm)	1	Cut Product
17.	RQ480190	Tension Bracket (H)	1	
51.		Phillips Truss Head Screw M4×8		
52.		Hex Socket Bolt M5×18		
53.		Hex Socket Bolt M5×14		
54.				
55.		Hex Socket Bolt M8×25		
56.		Hex Socket Bolt M6×20		
57.				
58.				
59.		Hex Socket Set Screw M5×8		
60.		Hex Nut M8		
61.		Hex Bolt M8×50 (Zinc)		
62.		Hex Socket Bolt M8×20		

10F PANTOGRAPH DRIVE F

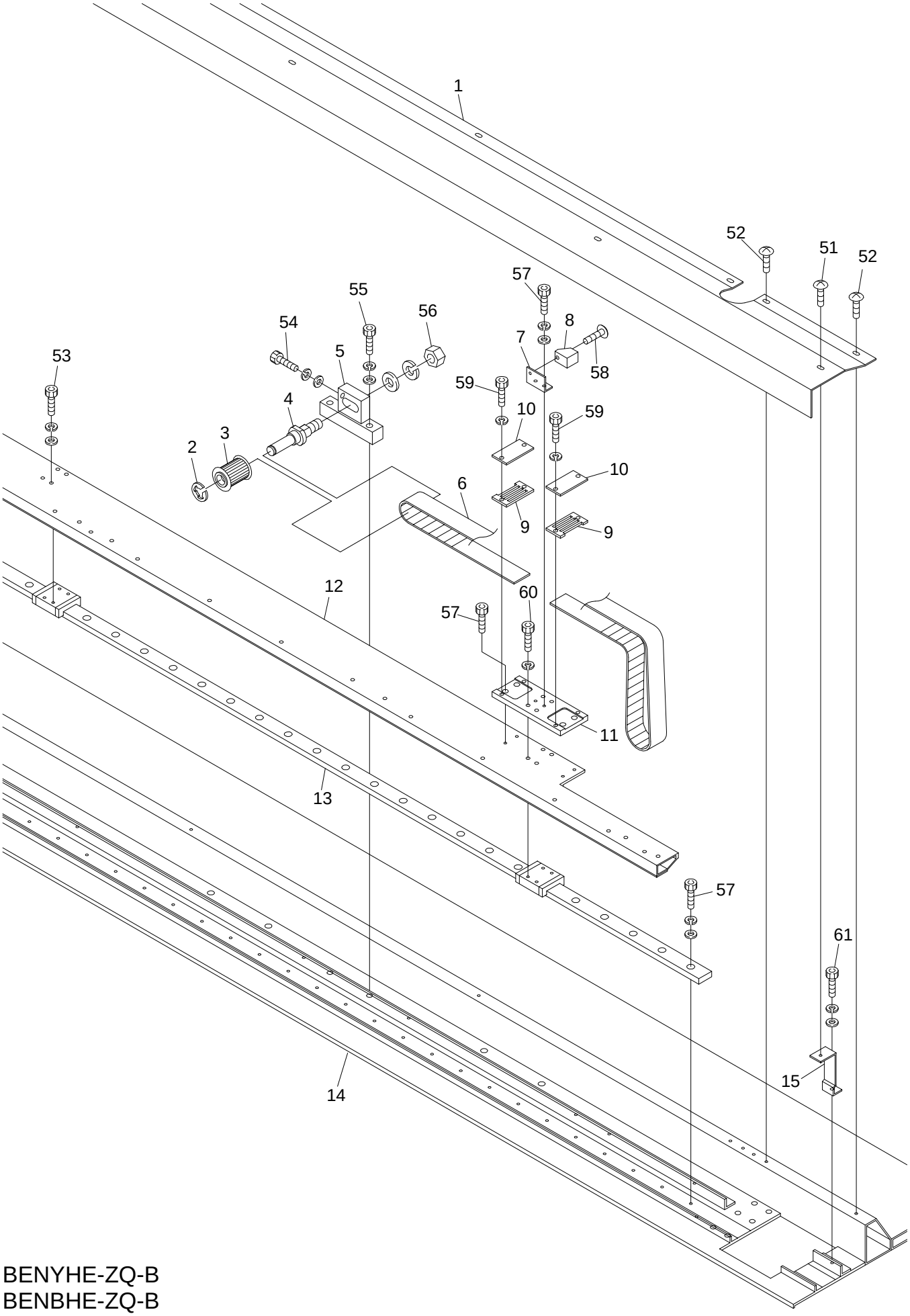

BENYHE-ZQ-B
BENBHE-ZQ-B

10F Pantograph Drive F

ITEM	LIST NO.	DESCRIPTION	QTY	NOTE
1.	RQ481031	V-Guide Cover	1	4 Head
	RQ481370	V-Guide Cover (380)	1	6 Head
2.	A9012404	E-Ring (8.0 Dia.)	1	
3.	RQ481080	Timing Pulley (V)	1	
4.	RQ481050	Timing Pulley Shaft B (V)	1	
5.	RQ481071	Idler Bracket	1	
6.	A9020191	Timing Belt (B250S5M-1800)	1	
7.	RQ481260	Magnet Fixing Bracket	1	
8.	A9052030	Magnet (M-102A-02)	1	
9.	RQ481281	V-Belt Set Rack (S5M-W25)	2	
10.	RQ481271	V-Belt Set Plate (S5M-W25)	2	
11.	RQ481250	Magnet Fixing Base	1	
12.	RQ481001	V-Slide Bracket (520)	1	4 Head
	RQ481012	V-Slide Bracket (380)	1	6 Head
13.	RQ481210	LM-Guide (V) L=2480	1	4, 6 Head
14.	RQ481022	V-Guide Bracket (520)	1	4 Head
	RQ481362	V-Guide Bracket (380)	1	6 Head
15.	RQ481351	Cover Fixing Bracket	10	
51.		Phillips Truss Head Screw M4×6		
52.		Phillips Truss Head Screw M3×8		
53.		Hex Socket Bolt M3×10		
54.		Hex Socket Bolt M5×25		
55.		Hex Socket Bolt M6×22		
56.		Hex Nut M10		
57.		Hex Socket Bolt M3×6		
58.		Truss Screw M3×6		
59.		Hex Socket Bolt M4×12		
60.		Hex Socket Bolt M3×14		
61.		Hex Socket Bolt M4×10		

10G PANTOGRAPH DRIVE G

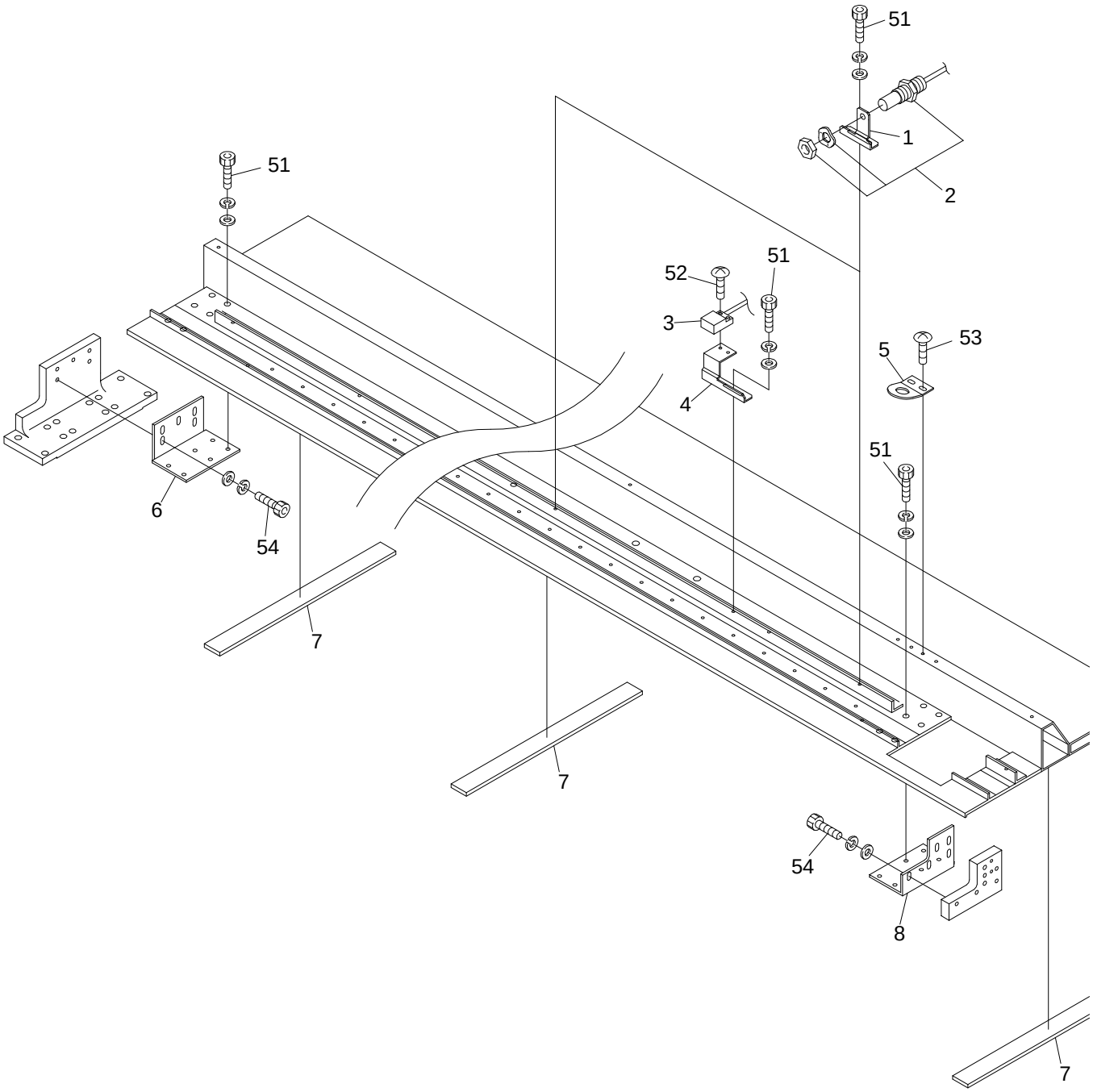

BENYHE-ZQ-B
BENBHE-ZQ-B

10G Pantograph Drive G

ITEM	LIST NO.	DESCRIPTION	QTY	NOTE
1.	RQ480260	Sensor Bracket (V)	2	
2.	A9052079	Limit Switch (RS-001)	2	
3.	A9052084	Origin Sensor (SW-3795)	1	
4.	RQ480270	Origin Sensor Bracket (V)	1	
5.	RQ481291	Cable Bracket (V-Side)	1	
6.	RQ481312	H-Guide Mounting Bracket (L)	1	
7.		V-Guide Felt	7	4 Head
			8	6 Head
8.	RQ481302	Connecting Plate Bracket (R)		
51.		Hex Socket Bolt M4×8		
52.		Phillips Truss Head Screw M3×8		
53.		Phillips Truss Head Screw M3×6		
54.		Hex Socket Bolt M4×10		

10H PANTOGRAPH DRIVE H

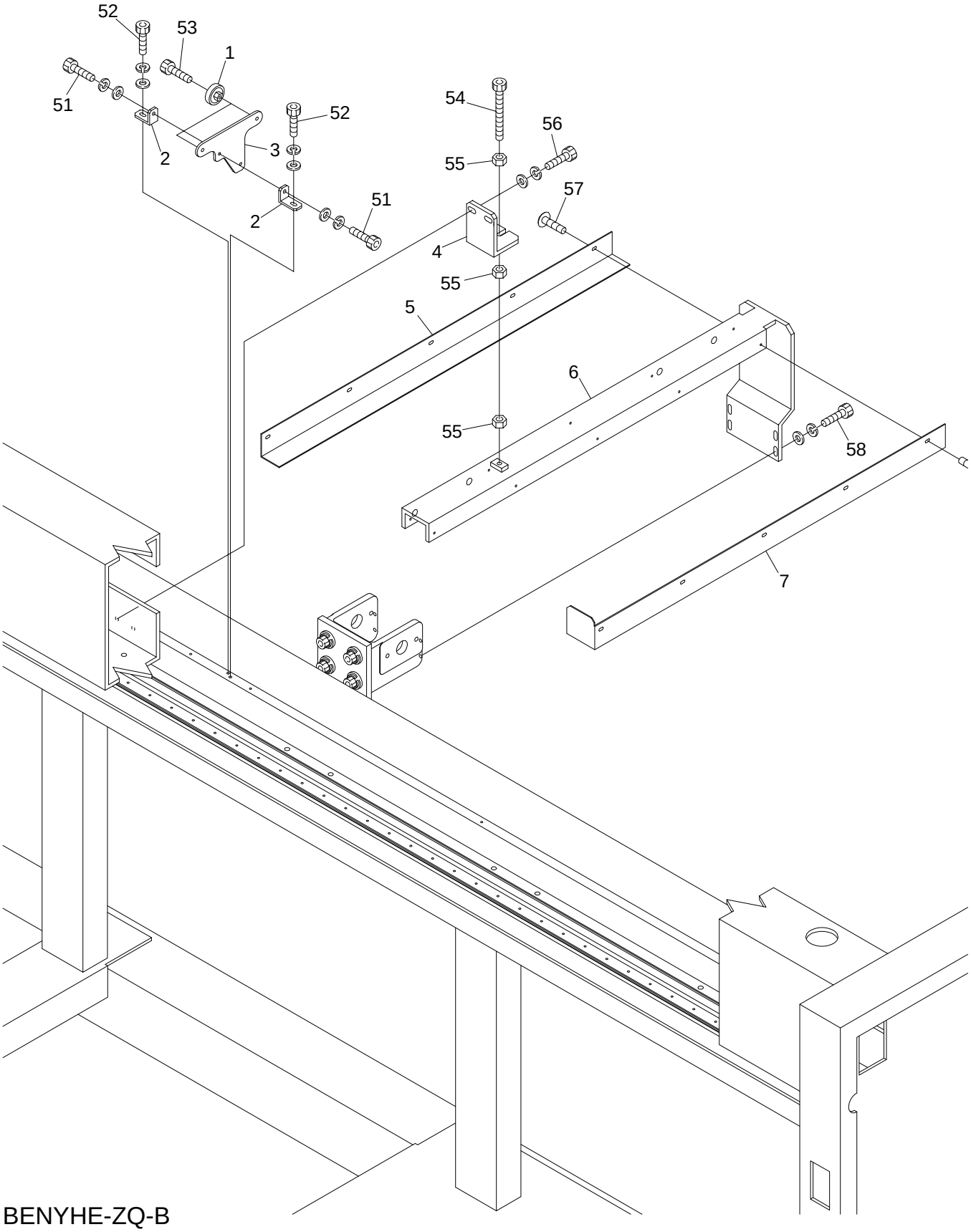

BENYHE-ZQ-B
BENBHE-ZQ-B

10H Pantograph Drive H

ITEM	LIST NO.	DESCRIPTION	QTY	NOTE
1.	BHP482290	V-Support Roller Assembly	2	
2.	RQ481440	Guide Roller Fixed Bracket	2	
3.	RQ481430	Guide Roller Fixed Base	1	
4.	RQ481450	Guide Rail Bracket	1	
5.	RQ481420	Guide Rail Cover (L)	1	
6.	RQ481400	Guide Rail	1	
7.	RQ481410	Guide Rail Cover (R)	1	
51.		Hex Socket Bolt M4×12		
52.		Hex Socket Bolt M4×20		
53.		Hex Socket Bolt M5×20		
54.		Hex Socket Bolt M6×75 (Full Thread)		
55.		Hex Nut M6		
56.		Hex Socket Bolt M6×20		
57.		Phillips Truss Head Screw M3×6		
58.		Hex Socket Bolt M5×16		

10I PANTOGRAPH DRIVE I

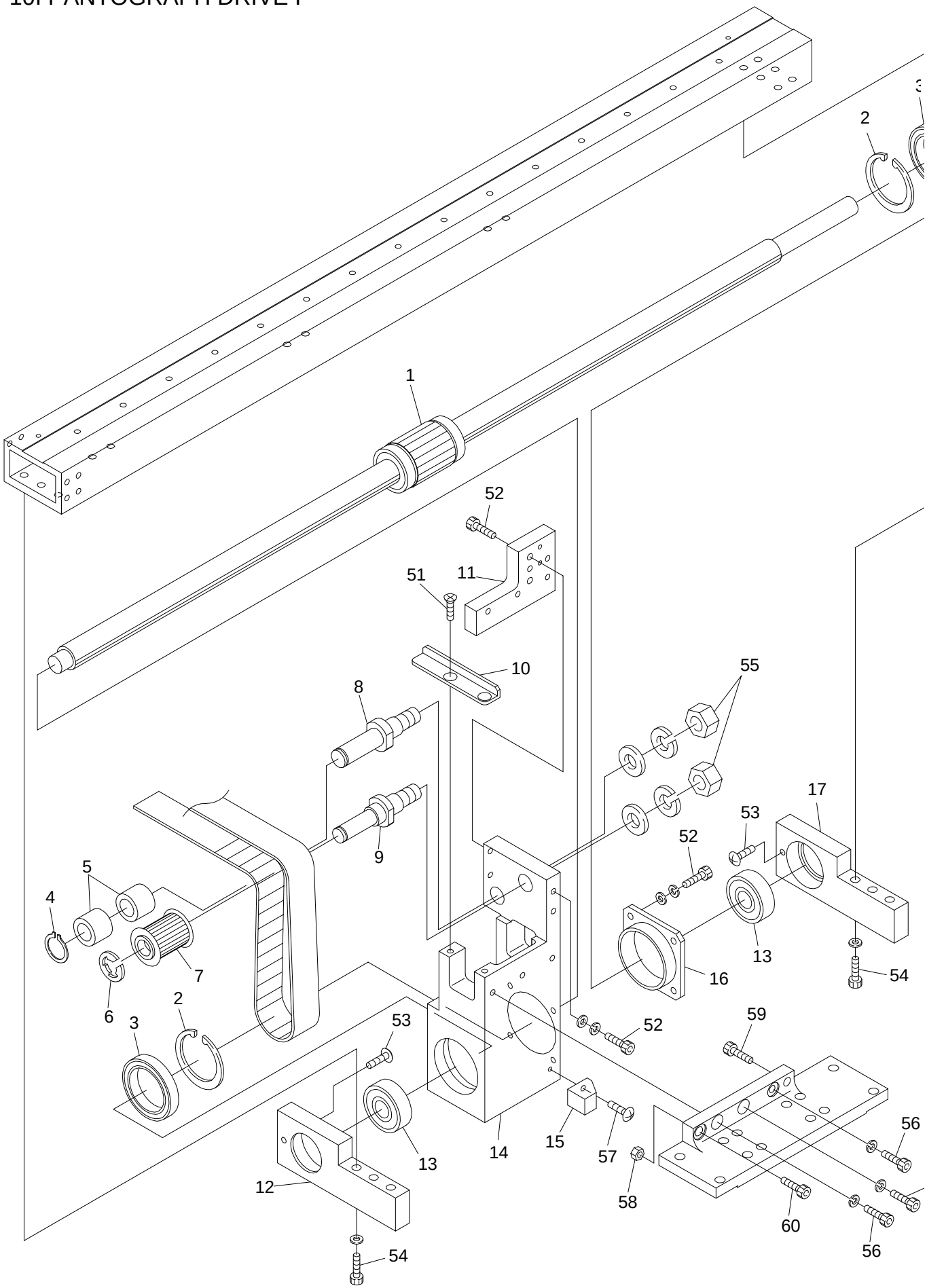

BENYHE-ZQ-B
BENBHE-ZQ-B

10I Pantograph Drive I

ITEM	LIST NO.	DESCRIPTION	QTY	NOTE
1.	RA480300	V-Drive Shaft with Pulley (S5M)	1	
2.	A9012401	Stop Ring (S=30)	2	
3.	A9010061	Bearing (6806)	2	
4.	A9012405	C-Ring (11.0 Dia.)	1	
5.	A9011065	Needle Bearing (TA-1215Z)	2	
6.	A9012404	E-Ring (8.0 Dia.)	1	
7.	RQ481080	Timing Pulley (V)	1	
8.	RQ481040	Timing Pulley Shaft A (V)	1	
9.	RQ481060	Timing Pulley Shaft C (V)	1	
10.	RQ481331	V-Slide Bracket Support	1	
11.	RQ481341	Pantograph Frame Connecting Plate	1	
12.	RQ481110	Spline Bearing Plate (Front)	1	
13.	A9010025	Bearing (6201ZZ)	2	
14.	RQ481100	V-Drive Slide Block	1	
15.	A9052030	Magnet (M-102A-02)	1	
16.	RQ481090	Spline Shaft Bearing Holder	1	
17.	RQ481120	Spline Bearing Plate (Rear)	1	
51.		Phillips Flat Head Screw M4×8		
52.		Hex Socket Bolt M4×12		
53.		Phillips Truss Head Screw M4×10		
54.		Hex Socket Bolt M5×25		
55.		Hex Nut M10		
56.		Hex Socket Bolt M4×18		
57.		Phillips Truss Head Screw M3×8		
58.		Hex Nut M6		
59.		Hex Socket Bolt M6×12		
60.		Hex Socket Bolt M6×16		
61.		Hex Socket Bolt M4×12		

10J PANTOGRAPH DRIVE J

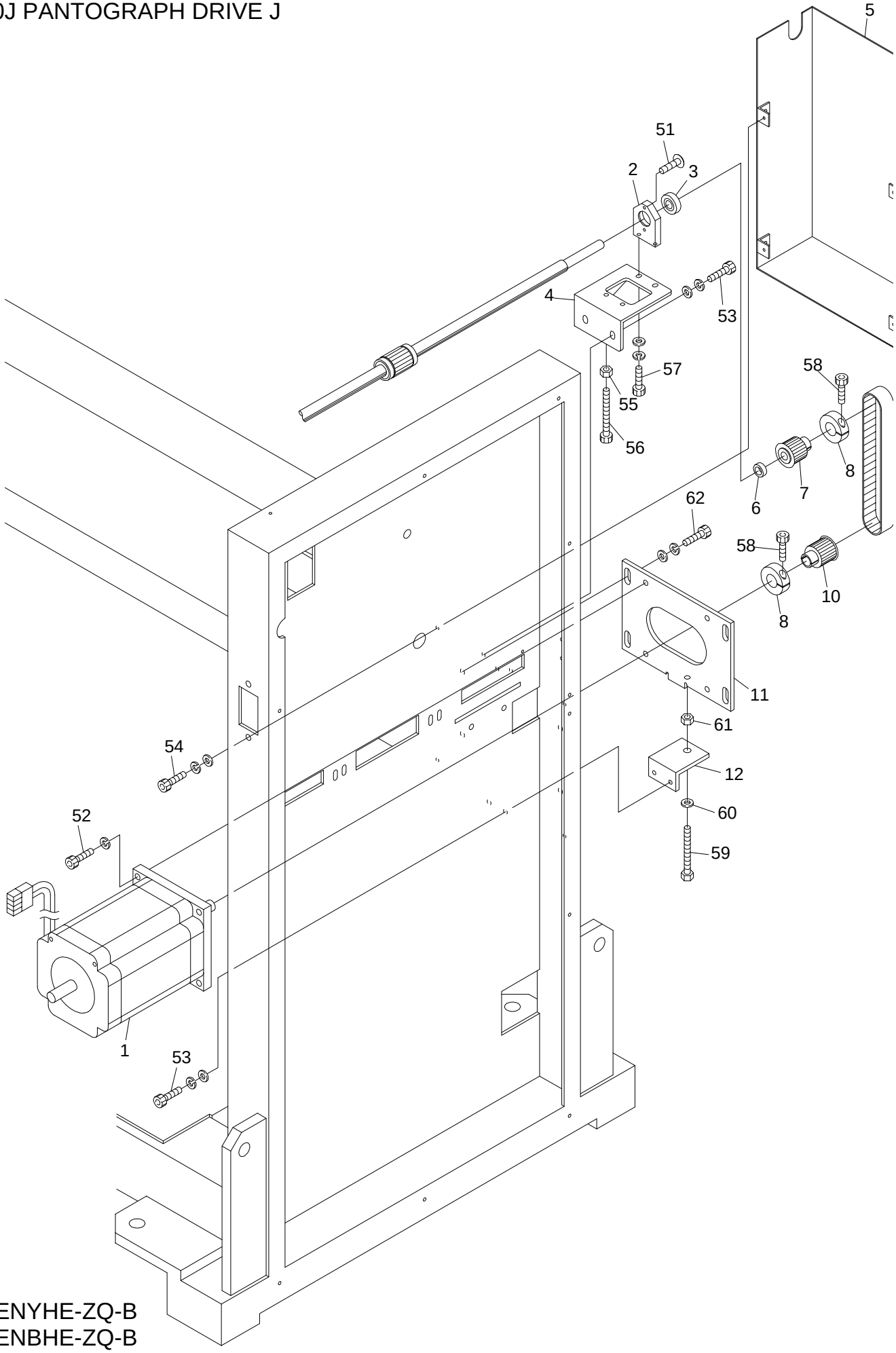

BENYHE-ZQ-B
BENBHE-ZQ-B

10J Pantograph Drive J

ITEM	LIST NO.	DESCRIPTION	QTY	NOTE
1.	KA480010	Pulse Motor (TS3650N1)	1	
2.	RQ481160	Support Plate	1	
3.	A9010003	Bearing (6001ZZ)	1	
4.	RQ481170	Support Base	1	
5.	RQ481200	V-Pulse Motor Cover	1	
6.	RQ481130	Collar (Spline)	1	
7.	RQ481140	Timing Pulley	1	
8.	HH481140	Clamping Collar (19.0 Dia.)	2	
9.	A9020192	Timing Belt (250S5MM475)	1	
10.	RQ481150	Drive Pulley	1	
11.	RQ481180	Pulse Motor Fixing Plate	1	
12.	RQ481190	Tension Bracket (V)	1	
51.		Phillips Truss Head Screw M4×6		
52.		Hex Socket Bolt M8×22		
53.		Hex Socket Bolt M6×20		
54.		Hex Socket Bolt M4×12		
55.		Hex Nut M6		
56.		Hex Socket Bolt M6×30		
57.		Hex Socket Bolt M5×16		
58.		Hex Socket Bolt M5×18		
59.		Hex Bolt M8×35 (Zinc)		
60.		Plain Washer M8		
61.		Hex Nut M8		
62.		Hex Socket Bolt M8×25		

11A-1 CONTROL A (NY-2)

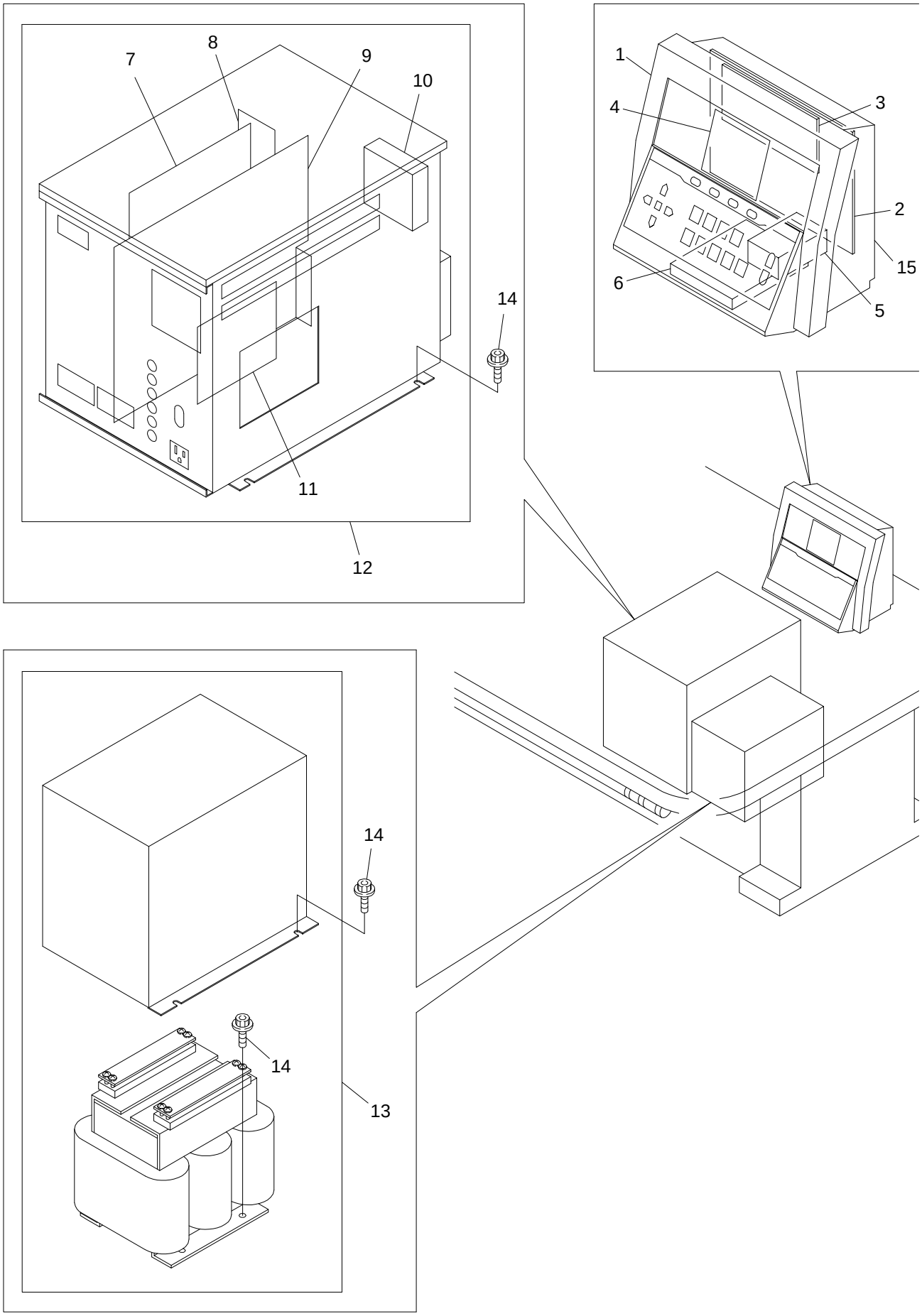

BENYHE-ZQ-B
BENBHE-ZQ-B

11A-1 Control A (NY-2)

ITEM	LIST NO.	DESCRIPTION	QTY	NOTE
1.	EAY033A1	NS Automat Controller	1	
2.	EBY02220	5613A N CPU Board	1	
3.	EBY01240	5430 N Memory Board	1	
4.	EBY02200	LCD Display (Optolex)	1	
5.	EBY01270	NS Automat Power Supply	1	
6.	EBY01352	Floppy Disk Drive	1	
7.	EBY01620	5751 NY Inverter Unit	1	
8.	EBY01900	5860 NY Back Board (UAD-IXA)	1	
9.	EBY01890	5850 NY Control Board Unit (UAD-IXA)	1	
10.	FA904147	Cooling Fan (UAD-IXA)	1	
11.	EBY01910	5870 NY Power Board (UAD-IXA)	1	
12.	EAY046A2	NY Driver Unit (UAD-IXA)	1	
13.	EAY046A3	NY Transformer, 1-Phase (UAD-IXA)	1	
	EAY047A3	NY Transformer, 3-Phase (UAD-IXA)	1	
14.		Hex Socket Flange Bolt M6×12		
15.	EBY01510	Automat Power Cable	1	

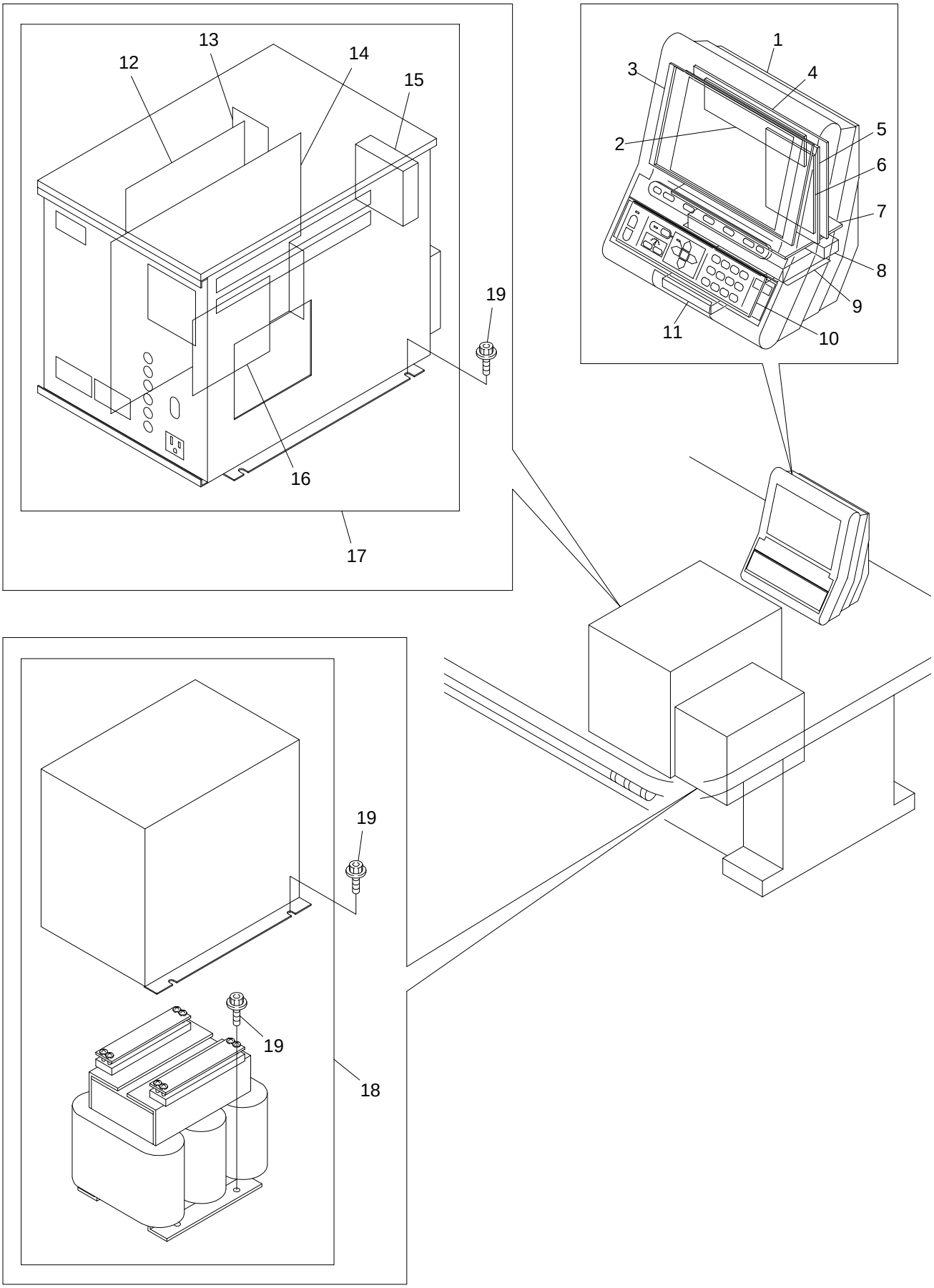
12
13
14
15
19
16
17
1
3
4
2
5
6
7
8
9
11
10
19
19
18

11A-2 Control A (NB)

ITEM	LIST NO.	DESCRIPTION	QTY	NOTE
1.	EAY038A1	NR Automat Controller	1	
2.	EBY01550	5480 Memory Board (NR)	1	
3.	EBY01600	Color LCD (NR)	1	
4.	EBY01540	5421 I/O Board (NR)	1	
5.	EBY01530	5411 CPU Board (NR)	1	
6.	EBY01580	5470 Back Light Board (NR)	1	
7.	EBY01560	5452 Back Board (NR)	1	
8.	EBY01380	Power Inlet (with Noise Filter)	1	
9.	EBY01590	NR Power Supply Switch (MRW160)	1	
10.	EBY01570	5460 Switch Connecting Board (NR)	1	
11.	EBY01352	Floppy Disk Drive	1	
12.	EBY01620	5751 NY Inverter Unit	1	
13.	EBY01900	5860 NY Back Board (UAD-IXA)	1	
14.	EBY01890	5850 NY Control Board Unit (UAD-IXA)	1	
15.	FA904147	Cooling Fan (UAD-IXA)	1	
16.	EBY01910	5870 NY Power Board (UAD-IXA)	1	
17.	EAY046A2	NY Driver Unit (UAD-IXA)	1	
18.	EAY046A3	NY Transformer, 1-Phase (UAD-IXA)	1	
	EAY047A3	NY Transformer, 3-Phase (UAD-IXA)	1	
19.		Hex Socket Flange Bolt M6×12		

11B CONTROL B

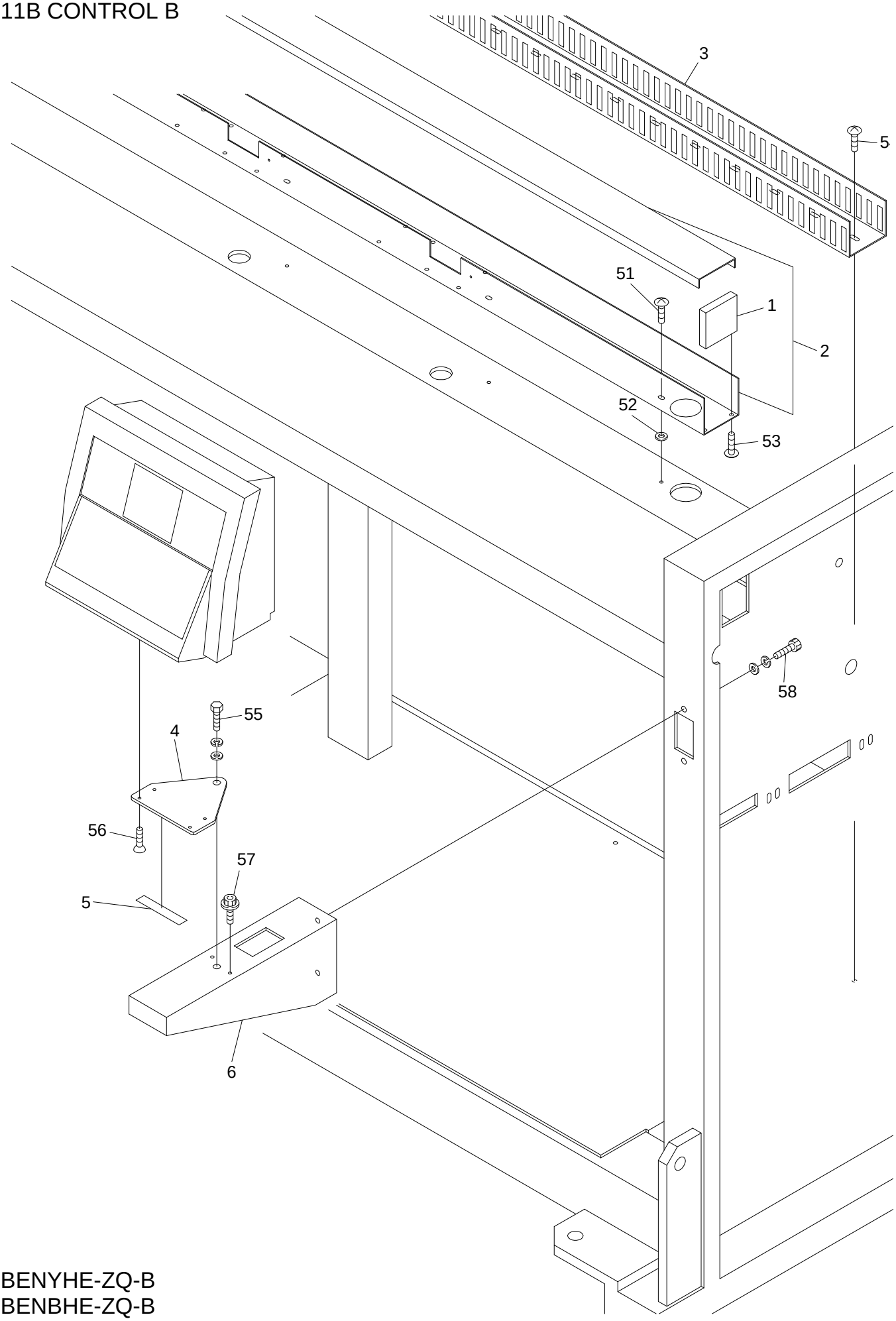

BENYHE-ZQ-B
BENBHE-ZQ-B

11B Control B

ITEM	LIST NO.	DESCRIPTION	QTY	NOTE
1.	KX510060	Duct End Cover	2	
2.	RQ510010	Cable Duct Set (NYHE-ZQ-B04)	1	
	RQ510020	Cable Duct Set (NYHE-ZQ-B06)	1	
3.	KN511180	Wiring Cable Duct (3 x 2)	1	
4.	HV330010	Automat Base Plate	1	NYHE
	HV330040	NR Automat Bracket	1	NBHE
5.	HV330022	Automat Bracket Spacer	1	
6.	RA330011	Automat Fixed Base	1	
51.		Phillips Truss Head Screw M5×15		
52.		Flat Washer M10		
53.		Phillips Truss Head Screw M5×10		
54.		Phillips Truss Head Screw M6×10		
55.		Hex Bolt M10×25		
56.		Hex Socket Flat Head Screw M4×10		
57.		Hex Socket Bolt M5×10		
58.		Hex Socket Bolt M8×20 (Zinc)		

12 ACCESSORIES

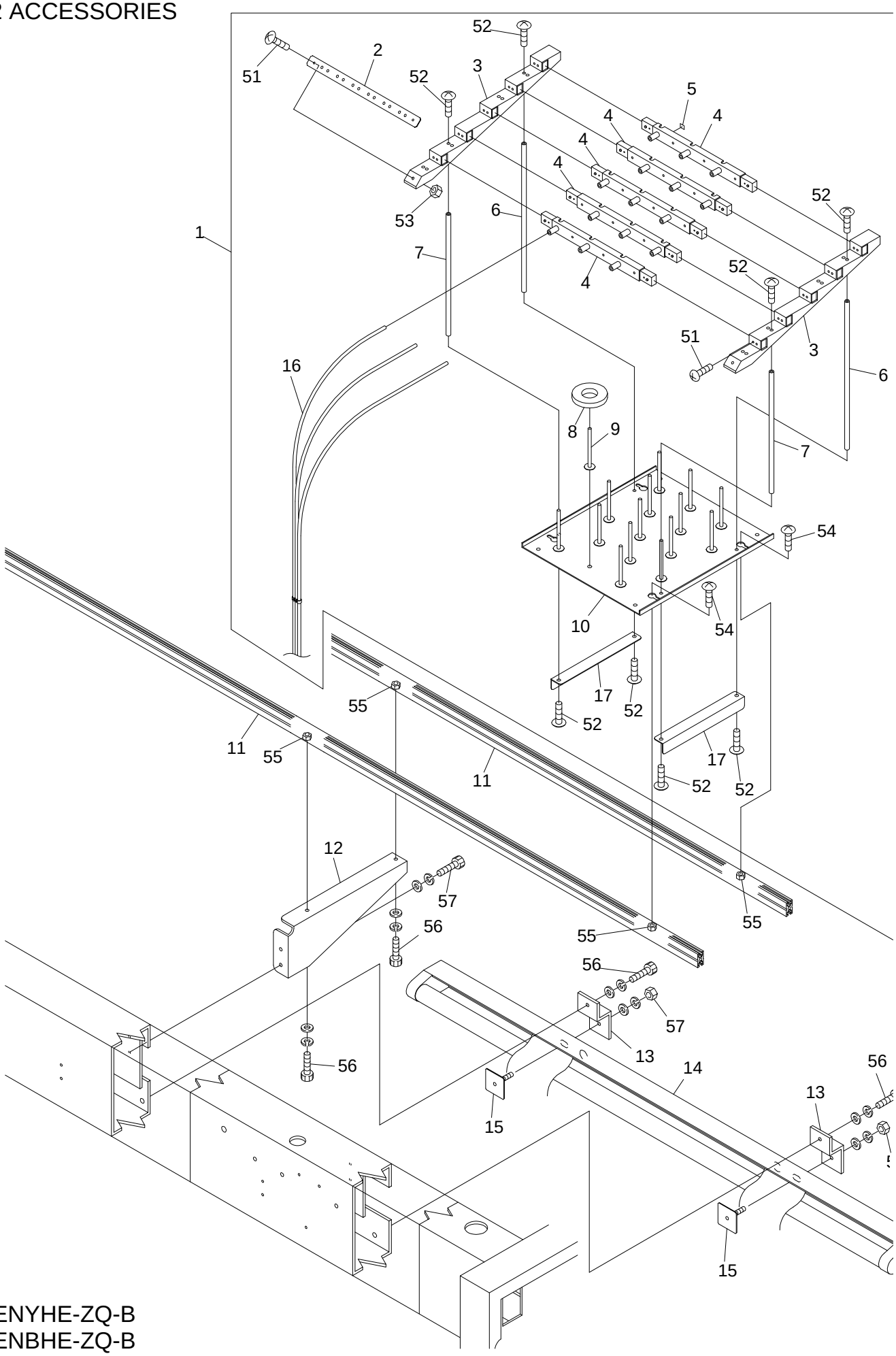

BENYHE-ZQ-B
BENBHE-ZQ-B

12 Accessories

(H = Head Qty.)

ITEM	LIST NO.	DESCRIPTION	QTY	NOTE
1.	MG710081	Thread Stand Assembly (NYHE-ZQ-B04)	Hx1	
2.	RD710370	Tube Holding Bracket	Hx1	
3.	RD710340	Thread Guide Base (ZQ)	Hx2	
4.	RD710330	Thread Guide Base, Upper (ZQ)	Hx5	
5.	RD710380	Thread Stand Number Decal	Hx1	
6.	RD710360	Thread Stand Support, Rear	Hx2	
7.	RD710350	Thread Stand Support, Front	Hx2	
8.	RD710390	Thread Stand Felt Ring (8×34×70 Dia.)	Hx15	
9.	HT710000	Thread Stand Pin	Hx15	
10.	RD710321	Thread Stand Base (ZQ)	Hx1	
11.	RQ710040	Thread Stand Mounting Rail (NYHE-ZQ-B04, 520)	1	4 Head
	RQ710050	Thread Stand Mounting Rail (NYHE-ZQ-B06, 380)	1	6 Head
12.	RD710031	Thread Stand Fixing Stay (ZQ)	3	4 Head
			4	6 Head
13.	A100523	Lamp Support Bracket	4	
14.	A100524	110 Volt Lamp Assembly (NYHE-ZQ-B04,06)	2	
	A100525	220 Volt Lamp Assembly (NYHE-ZQ-B04,06)	2	
15.	A100524-3	Mounting Stud Plate	4	
16.	RD710310	Thread Stand Tube		Cut Product
17.	RD710490	Thread Stand Base Bracket	Hx4	
51.		Phillips Truss Head M4×10		
52.		Phillips Truss Head M5×12		
53.		Hex Nut M4		
54.		Phillips Truss Head Screw M6×12		
55.		Hex Nut M6		
56.		Hex Socket Bolt M6×15		
57.		Hex Nut ¼-20		